MISSISSIPPI

TITLE 19
PART 7; CHAPTER 5
RULES AND REGULATIONS FOR THE UNIFORM STANDARDS CODE FOR THE FACTORY-BUILT HOMES LAW
REGULATION MH-5

AS ADOPTED, PURSUANT TO THE
ADMINISTRATIVE PROCEDURES ACT,
SECTION 25-41, MS CODE, 1972 ANNOTATED,
REVISED AND UPDATED
JANUARY 1, 2015

MIKE CHANEY
COMMISSIONER OF INSURANCE
AND STATE FIRE MARSHAL

RICKY DAVIS
FIRE MARSHAL, STATE CHIEF DEPUTY

STATE FIRE MARSHAL'S OFFICE
POST OFFICE BOX 79
JACKSON, MISSISSIPPI 39205 – 0079
TELEPHONE NUMBER: (601) 359-1061
FAX NUMBER: (601) 359-1076

Table of Contents

Rule 5.01: Promulgation and Purpose 6

Rule 5.01.1: General 6

Rule 5.01.2: Definitions[1] 7

Rule 5.01.3: Use of Manufacturer's Installation Instructions 12

Rule 5.01.4: Manufacturer's Installation Instruction Unavailable[1] 13

Rule 5.01.5: Instructions for Installation of Used Multi-Section Factory-Built Homes 14

Rule 5.02: Administration 14

Rule 5.02.1: Rules and Regulations 15

Rule 5.02.1-1: Licensure of Manufacturers, Developers, Retailers and Installers/Transporters 15

Rule 5.02.1-2: Manufacturer License Application 15

Rule 5.02.1-3: Retailer/Developer License Application 15

Rule 5.02.1-4: Repossession and Resale 16

Rule 5.02.1-5: Installer/Transporter License Application 16

Rule 5.02.1-6: Tax Identification Number 16

Rule 5.02.1-7: License Fees 16

Rule 5.02.1-8: Manufacturer Monitoring Inspection Fee[1] 17

Rule 5.02.1-9: Investigation and Examination of All License Applicants[1] 17

Rule 5.02.1-10: Non-Compliance[1] 19

Rule 5.02.1-11: Annual License Renewal Application 19

Rule 5.02.1-12: Licensee Bonding and Insurance Requirements[1] 20

Rule 5.02.1-13: Operating Without a Privilege License[1] 21

Rule 5.02.1-14: Installation Inspection[1] 21

Rule 5.02.1-15: Site Preparation, Anchoring and Blocking Requirement[1] 22

Rule 5.02.1-16: Time Period Allowed for Installation 22

Rule 5.02.1-17: Retailer/Developer Certificate of Inspection Form[1] 22

Rule 5.02.1-18: Installer Certificate of Inspection Form[1] 23

Rule 5.02.2: Factory-Built Home Installation Inspection Program 24

Rule 5.02.2-1: Purpose 24

Rule 5.02.2-2: Scope 25
Rule 5.02.2-3: Mississippi Factory-Built Home Installation Program Standards 25
Rule 5.02.2-4: Installation Inspection Requirements[1] 25
Rule 5.02.3: Installation Inspection Procedure 25
Rule 5.02.3-1: Scheduling of the Inspection[1] 25
Rule 5.02.3-2: Inspection Fees 26
Rule 5.02.3-3: Contract Rights Not Affected[1] 26
Rule 5.02.3-4: State and Local Permits 26
Rule 5.02.3-5: Inspection Checklist[1] 26
Rule 5.02.4: Certification of Installation 27
Rule 5.02.4-1: Certificate of Inspection 27
Rule 5.02.4-2: Procedures for Re-inspection Upon Failure to Pass[1] 27
Rule 5.02.4-3: Cost of Re-inspection 28
Rule 5.02.4-4: Scheduling of Re-inspection 28
Rule 5.02.4-5: Inspection Decal[1] 29
Rule 5.02.4-6: Inspector Qualifications 29
Rule 5.02.4-7: Verification of Installer/Transporter License 30
Rule 5.02.4-8: Site Preparation by Homeowner 30
Rule 5.02.4-9: Waiver of Rights Invalid[1] 31
Rule 5.02.4-10: Violations and Penalties 31
Rule 5.02.5: License Exceptions 31
Rule 5.02.6: Manufacturer Qualifications for License 32
Rule 5.02.7: Retailer Qualifications for License[1] 32
Rule 5.02.7-1: Temporary Promotional Retail Sales Activity 33
Rule 5.02.7-2: Safeguarding the Public Interest 34
Rule 5.02.7-3: Training Requirements 35
Rule 5.02.7-4: Vehicle Decals 35
Rule 5.02.7-5: Retail Lot Display and Temporary Storage[1] 35
Rule 5.02.7-6: Inspection of Retail Lot Units and Records[1] 36
Rule 5.02.8: Developer Qualifications for License 36

Rule 5.02.8-1: Safeguarding the Public Interest 37
Rule 5.02.8-2: Training Requirements[1] 38
Rule 5.02.8-3: Vehicle Decals 38
Rule 5.02.9: Installer/Transporter Qualification for License 39
Rule 5.02.9-1: Safeguarding the Public Interest 39
Rule 5.02.9-2: State and Local Compliance Requirements 39
Rule 5.02.9-3: Training Requirements[1] 40
Rule 5.02.9-4: Contract Requirement 40
Rule 5.02.9-5: Vehicle Decals 41
Rule 5.02.9-6: Monthly Installation Report 41
Rule 5.02.9-7: Recordkeeping 41
Rule 5.02.9-8: Responsibility for Transportation Damage 42
Rule 5.02.9-9: Temporary Installer/Transporter License 42
Rule 5.03: Inspection Procedures 42
Rule 5.03.1: Authorized Inspections of Manufacturing Plants, Retail Locations, and Installer/Transporter[1] 43
Rule 5.03.2: Inspection Findings of Non-Compliance 43
Rule 5.03.3: Requirements of Factory-Built Homes for Human Habitation 44
Rule 5.03.3-1: Anchoring and Blocking 44
Rule 5.03.3-2: Installation Inspection 44
Rule 5.03.3-3: Skirting of Factory-Built Homes 45
Rule 5.03.3-4: Factory-Built Homes Designated for Use Other Than Human Habitation. 45
Rule 5.03.4: Consumer Complaints 46
Rule 5.03.5: Violations and Penalties 46
Rule 5.04: Minimum Standards for Blocking, Anchors, And Tie Downs 48
Rule 5.04.1: Standards for “Coded” Areas 48
Rule 5.04.2: Standards for “Non-Coded” Areas 48
Rule 5.04.3: Windstorm Protection and Wind Zone Designation 49
Rule 5.04.4: Data Plate and HUD Label Requirements 50
Rule 5.04.4-1: HUD Label[1] 50

Rule 5.04.4-2: Data Plate 50
Rule 5.04.4-3: Missing HUD Label and Data Plate 50
Rule 5.04.4-4: Factory-Built Homes That Shall Not Be Transported[1] 51
Rule 5.04.4-5: Preparation of Manufactured Housing Units for Transportation 51
Rule 5.05: Installation Standards For New Factory-Built Homes 52
Rule 5.06: Installation Standards For Used Factory-Built Homes 52
Rule 5.06.1: Site Preparation 53
Rule 5.06.1-1: Planning 53
Rule 5.06.1-2: Soil Conditions[1] 53
Rule 5.06.1-3: Site Grading and Drainage 53
Rule 5.06.1-4: Raised Soil Pad 54
Rule 5.06.1-5: Determination of Proper Site Preparation 55
Rule 5.06.1-6: Written Contract on Site Preparation[1] 56
Rule 5.06.1-7: Site Preparation by Landowner and/or Homeowner 56
Rule 5.06.1-8: Removal of Organic Material 56
Rule 5.06.1-9: Clearance Under the Home 56
Rule 5.06.1-10: Sloped Site Installation 57
Rule 5.06.1-11: Ventilation of Under-floor Areas and Moisture Barrier 57
Rule 5.06.2: Fire Separation 57
Rule 5.06.3: Sites Prone to Flooding[1] 58
Rule 5.06.4: Soil Classification[1] 58
Rule 5.06.5: Soil Type/Bearing Capacity 59
Rule 5.06.6: Required Piers and Anchorages[1] 60
Rule 5.06.7: Pier Construction 62
Rule 5.06.7-1: Single Stacked Piers 62
Rule 5.06.7-2: Pier Caps 63
Rule 5.06.7-3: Shims 63
Rule 5.06.7-4: Removal of Organic Material 63
Rule 5.06.7-5: Protection From Frost Heave 63
Rule 5.06.7-6: Corner Piers 64

Rule 5.06.7-7: Double Tiered Pier Heights[1] 64
Rule 5.06.7-8: Cast-In-Place Concrete Piers 65
Rule 5.06.7-9: Pier Footings 65
Rule 5.06.7-10: Marriage Wall Piers 66
Rule 5.06.8: Pier Spacing and Placement[1] 66
Rule 5.06.8-1: Placement of Door and Window Support Piers[1] 66
Rule 5.06.8-2: Placement of End Support Piers[1] 67
Rule 5.06.8-3: Placement of Piers Under Concentrated Loads[1] 67
Rule 5.06.8-4: Placement of Perimeter Support Piers 67
Rule 5.06.8-5: Piers for Homes Installed In Designated Flood Area 67
Rule 5.06.9: Installation Instructions for ABS Pads[1] 68
Rule 5.06.10: Tie-downs 70
Rule 5.06.10-1: Single-wide Factory-Built Homes 70
Rule 5.06.10-2: Multi-Sectional Factory-Built Homes 72
Rule 5.06.10-3: Pan-Type Foundation Stabilizing Systems 72
Rule 5.06.10-4: Alternate Systems[1] 73
Rule 5.06.10-5: Tie-Down Spacing and Sizes[1] 73
Rule 5.06.11: Anchors 75
Rule 5.06.11-1: Soil Classification of Anchors 75
Rule 5.06.11-2: Determining the Soil Class of Anchors 75
Rule 5.06.11-3: Preferred Soil Class Anchor[1] 75
Rule 5.06.11-4: Proper Installation of Ground Anchors 76
Rule 5.07: Official Notices and Bulletins 77
Rule 5.08: Severability 77
Rule 5.09: Repeal of Emergency Regulations[1] 77
Rule 5.10: Effective Date 77

Note: [1]- refers to portions of the text where typographical corrections have been made, see original version on file at Secretary of State's Office.

Title 19

Part 7: State Fire Marshal

Chapter 5: Rules and Regulations for the Uniform Standards Code for the Factory-Built Homes Law Regulation MH- 5

Rule 5.01: Promulgation and Purpose

Rule 5.01.1: General

These Rules and Regulations for Factory-Built Homes are promulgated by the Commissioner of Insurance of the State of Mississippi acting through the Chief Deputy State Fire Marshal and the Factory-Built Home Division in accordance with the Uniform Standards Code for Factory-Built Homes Law and the Mississippi Administrative Procedures Act, *Miss. Code Ann.* § 25-43-1, et seq., as amended, and shall become effective after adopted and promulgated in accordance with the provisions of the Mississippi Administrative Procedures. This Regulation is being filed as a regulation pursuant to the provisions of House Bill 1435, 2008 Regular Legislative Session as codified in *Miss. Code Ann.* § 75-49-11 (Supp. 2013); and upon agreement between the Mississippi State Fire Marshal's Office, Factory-Built Home Division (Division) and the Department of Housing and Urban Development (HUD), which requires the Division to conduct installation inspections of Factory-Built homes from and after July 1, 2009.

The purpose of these Rules and Regulations is to prevent the loss of life and property from fire and related hazards, and to restrict health hazards in Factory-Built homes by providing standards for construction, heating systems, and by requiring compliance with such standards during construction, marketing, transport, installation, anchoring and tie-down for Factory-Built homes in the State of Mississippi.

Source: *Miss. Code Ann.* §§ 75-49-5; 75-49-9; 75-49-11 (Supp. 2013).

Rule 5.01.2: Definitions[1]

For the purpose of this Regulation, the following terms are defined as follows, unless the context clearly indicates otherwise:

A. "ANSI" - the American National Standards Institute or its successor.

B. "Certificate of Inspection Form"- is a form issued by the Factory-Built Home Division of the State Fire Marshal's Office that contains the certificates of inspection submitted by any retailer, developer and installer/transporter who is engaged in the sale, transport and/or set-up (installation, blocking, anchoring and tie-down) of a Factory-Built home intended for human habitation, to the Division within 72 hours (3 days) of the completion of the installation of a home at the home site.

C. "Chief Deputy State Fire Marshal" - is the individual appointed by the Commissioner of Insurance, who, along with his employees, is designated by the Commissioner to implement and enforce this chapter and to maintain, among other duties, the Factory- Built Home Division of the Insurance Department.

D. "Commissioner" - is the Commissioner of Insurance of the State of Mississippi.

E. "DAPIA" - (Design Approval Primary Inspection Agency) is a state or private organization that has been accepted by the Secretary of Housing and Urban Development to evaluate and approve or disapprove Factory-Built home designs and quality control procedures.

F. "Developer" - for the purposes of this Regulation, means any person who buys Factory-Built homes and real estate and then offers to sell to the general public land-home "package deals" consisting of a Factory-Built home with real estate. Upon renewal of a license, a developer must provide documentation to the Department of Insurance that he or she has at least five (5) available Factory-Built home sites. A developer shall be responsible for installation requirements for Factory-Built homes as set forth in Rule 5.04 – 5.06 of this Regulation.

G. "Diagonal Tie" - any tie-down designed to resist horizontal sliding or shear forces and which deviates not less than 30º (0.52 rad) from a vertical direction.

H. "Division" - is the Factory-Built Home Division of the State Fire Marshal's Office.

I. "Employee" - any person, including a minor whether lawfully or unlawfully employed, in the service of an employer under any contract of hire or apprenticeship, written or oral, express or implied, and is under the control of the employer, provided there shall be excluded there from all independent contractors. The control of the employer includes supervision of an employee's work, setting the employee's work schedule, and determining the method the employee uses to perform the specific work.

J. "Employer" - any person or entity who is retained to engage in, or who engages in, the

business of directing, supervising, controlling or correcting the work conducted by persons retained as their employee.

K. ”Fire Marshal’s Office” - the Division of the Department of Insurance that is responsible for the regulation of Factory-Built housing in the State of Mississippi, and includes the Commissioner of Insurance, the State Chief Deputy Fire Marshal, and Deputy State Fire Marshals.

L. “Foundational Designs”- designs by a licensed architect or engineer that sets forth the foundations requirements for the Factory-Built home.

M. “Factory-Built Home” - is a mobile home, manufactured home, and a modular home as those terms are defined in *Miss. Code Ann.* § 75-49-3 (Supp. 2013).

N. “General Liability Insurance” - is a form of insurance that indemnifies against liability on account of injury to the person or property of another.

O. “Ground Anchor” - any device at the Factory-Built home site designed for the purpose of securing a Factory-Built home to the ground.

P. “Homeowner” (Consumer) - is any person or firm who has purchased or is purchasing a Factory-Built home in good faith for purposes other than resale.

Q. “Hook and Drop” - the delivery of any Factory-Built home to a residential site by a licensed installer/transporter with no intention of completing the anchoring and blocking of the unit which is to be used for human habitation.

R. “Human Habitation”- describes a place which will be occupied by humans, but does not include places that will be inhabited only sporadically for use as a hunting or fishing camp. In these regulations, “human habitation” shall be presumed to be the intended purpose for any factory-built home manufactured under the guidelines of the National Manufactured Housing Construction and Safety Standards Act of 1974, as amended (42 USCS 5401 et seq.), as well as the Manufactured Home Construction and Safety Standards contained in Title 24 Code of Federal Regulations, Part 3280, et seq. (HUD). This definition includes factory-built homes having one or more habitable rooms which are designed to be occupied by one family with facilities for living, sleeping, cooking and eating. Homes designed for human habitation shall be presumed to be intended for human habitation, unless properly certified otherwise pursuant to Rule 5.03.3-4 of these regulations.

S. “Hurricane Zone” - an area of Mississippi that has encountered sustained winds of 100 mph or more. Wind (Hurricane) Zone II areas for the State of Mississippi include the following counties: Hancock, Harrison, Jackson, George, Stone and Pearl River.

T. “Independent Contractor” - any person, firm or corporation who contracts to do a piece of work according to his own methods ,without being subject to the control of his employer, except

as to the results of the work, and who has the right to employ and direct the outcome of the workers independent of the employer and free from any superior authority in the employer to say how the specified work shall be done or what the laborers shall do as the work progresses; one who undertakes to produce a given result without being in any way controlled as to the methods by which he attains the result.

U. "Installer/transporter" - is any person engaged for hire as an independent contractor in the movement of, transportation, or both, or the installation, blocking, anchoring and tie- down of a Factory-Built home. An independent contractor "installer/transporter" shall not include persons who do not hold themselves out for hire to the general public for the purposes described in this definition. An installer/transporter shall be responsible for installation requirements for Factory-Built homes as set forth in Rule 5.04 – 5.06 of this Regulation. The use of the term "installer/transporter" in these regulations is intended to be synonymous with the term "Independent contractor installer or transporter" as defined in *Miss. Code § 75-49-3 (Supp. 2013)*.

V. "Inspection Decal" - is the decal issued and installed by a duly appointed representative (inspector) of the Factory-Built Home Division of the State Fire Marshal's Office that is placed on all new and used Factory-Built homes at the time of a passed installation inspection by the State Fire Marshal inspector. The label is to be affixed near the HUD seal at the rear of the home or on the end of the home opposite the tongue end if no HUD seal is present.

W. "Inspector" - any person who is employed as a Deputy State Fire Marshal, or any person or entity designated and authorized by the State Fire Marshal's Office pursuant to requirements set forth in Rule 5.02.4-6 of this Regulation who conducts installation inspections pursuant to the MS Inspection Program.

X. "Installation" - completion of work performed to site, place, stabilize, support, anchor, and close up a Factory-Built home, upon footings, piers or foundations and to join sections of a multi-section Factory-Built home sited in this State.

Y. "Installation Instruction Manual" - DAPIA-approved instructions provided by the home manufacturer that accompany each new Factory-Built home and detail the home manufacturer requirements for support and anchoring systems and other work completed at the installation site to comply with the National Manufactured Housing Construction and Safety Standards Act of 1974, as amended (42 USCS 5401 et seq.) and as amended by the Manufactured Housing Improvement Act of 2000.

Z. "Licensee" - is any manufacturer, retailer, developer or installer/transporter who obtains a privilege license from the Factory-Built Home Division of the State Fire Marshal's Office of the Department of Insurance. The licensee shall comply with all laws of the State of Mississippi regarding Factory-Built homes.

AA. "Local Authority Having Jurisdiction" (LAHJ) - is any Federal, State, County, Municipal or community organization that oversees or regulates permitting, registration, and/or installation of

Factory-Built homes.

BB. “Manufacturer” - is any person engaged in the production (construction) of Factory-Built homes.

CC. “Manufactured Building” - a closed structure, building assembly or systems of subassemblies which may include structural, electrical, plumbing, heating, ventilating, utility service lines, footings, foundations, porches or other service systems manufactured in manufacturing facilities, for installation or erection, with or without other specified components, as a finished building or as part of a finished building, which shall include, but not limited to, residential dwelling units, commercial, institutional, storage and industrial structures. Factory-Built homes are excluded. Manufactured building may also mean at the option of the manufacturer, any building of open construction made or assembled in manufacturing facilities away from the building site, for installation, or assembly and installation on the building site. For purposes of these regulations, the licensing and other requirements imposed shall only apply to Manufactured Buildings intended for human habitation.

DD. “Manufactured Home” - defined by the United States Department of Housing and Urban Development, as a new or used structure defined by, and constructed in accordance with, the National Manufactured Housing Construction and Safety Standards Act of 1974, as amended (42 USCS 5401 et seq.) and as amended by the Manufactured Housing Improvement Act of 2000. For the purposes of this Regulation, it also includes those structures defined as a manufactured home and mobile home pursuant to *Miss. Code Ann.* § 75-49-3 (Supp. 2013).

EE. “Mississippi Department of Transportation” (MDOT) - is the regulatory agency for transportation in the State of Mississippi. All licensees (manufacturers, retailers, developers or installer/transporters) shall comply with the requirements regarding transportation of Factory-Built homes under the jurisdiction of MDOT in the State of Mississippi.

FF. “Mobile Home” - is a structure Factory-Built before June 15, 1976, that is not constructed in accordance with the National Factory-Built Housing Construction and Safety Standards Act of 1974, as amended, (42 U.S.C. Section 5401 et seq.). It is a structure that is transportable in one or more sections, that, in traveling mode, is eight (8) feet or more in width and thirty-two (32) feet or more in length or when erected on site, is two hundred fifty six (256) or more square feet and that is built on a chassis and designed to be used as a dwelling unit with or without a permanent foundation when connected to the required utilities, and includes any plumbing, heating, air conditioning and electrical systems contained therein. A "mobile home" also includes any structure which meets all the requirements and complies with the standards established under this chapter.

GG. “Modular Home” - is a structure which is: (i) transportable in one or more sections; (ii) designed to be used as a dwelling when connected to the required utilities, and includes plumbing, heating, air conditioning and electrical systems with the home; and (iii) certified by its manufacturers as being constructed in accordance with a nationally recognized building code.

HH. “Modular Home Contractor” - is a licensed residential building contractor or a licensed retailer who buys Factory-Built modular homes for resale to the general public, whether to be located on the consumer's home site or a land-home package on property owned by the modular home contractor. A Mississippi licensed modular home contractor is authorized to sell new modular homes for installation on a consumer's home site or as part of a land- home package without the necessity of maintaining a separate sales center. A modular home contractor shall be responsible for the installation requirements for modular housing as provided in as set forth in Rule 5.04 – 5.06 of this Regulation.

II. “New Factory-Built Home” - is a Factory-Built home as defined in *Miss. Code Ann.* § 75-49-3, which has never been the subject of a first sale for human habitation.

JJ. “NFPA” - The National Fire Protection Association or its successor.

KK. “Non-coded Area” - is any local jurisdiction (county or municipality) who have not adopted the latest edition and Appendices of the International Building Code published by the International Code Council or the board of supervisors of any county who has not adopted *Miss. Code Ann.* § 75-49-21, or other recognized building codes or portion thereof.

LL. “Non-compliance” - is failure or refusal to comply with imposed standards and/or regulations.

MM. “Park Model” - is a recreational park trailer, built on a single chassis, and having a gross trailer area of 400 square feet or less in the set-up mode when measurements are taken on the exterior of the trailer. The square footage includes all the siding, corner trim, molding, storage space, and area enclosed by windows, but not the roofing overhang. A park model is not a permanent dwelling. It is temporary living quarters for recreational, camping, travel, or seasonal use.

NN. “Person” - includes, unless the context indicates otherwise, corporations, companies, associations, firms, and partnerships, as well as individuals, but does not include any agency of government or tribal governmental entity.

OO. “Pier Footing or Foundation” - the structural support pad that a support pier is placed upon.

PP. “Pier Cap” - a concrete plate placed on top of the highest open cell block of the pier.

QQ. “Proprietary Pan-Type Foundation System” - any engineer designed device used for windstorm and seismic protection of a Factory-Built home.

RR. “Retailer” - is any person engaged in the buying and thereafter selling, displaying or offering for sale of new, used or repossessed Factory-Built homes to the general public.

SS. “Set-up” - is any assembly or installation of a Factory-Built home onsite that includes aspects

of work that are governed by this chapter.

TT. "Site" - an area of land that a Factory-Built home is installed upon. It is defined as the area under the home to include a 10 ft. perimeter around the home.

UU. "Stabilizer Plate" - is a device used to prevent horizontal movement of a ground anchor.

VV. "Surety Bond" - is a type of bond which protects against loss due to the inability or refusal of an obligor to perform his or her contract.

WW. "Tie-Down" - is any device designed for the purpose of anchoring a Factory-Built home to the ground anchors.

XX. "Used Factory-Built Home" - is a Factory-Built home as defined in *Miss. Code Ann.* § 75-49-3 that has been subject of a first sale for human habitation, whether within this state or elsewhere.

YY. "Vehicle Decal" - is a decal to be issued and placed on both the driver and passenger doors of the transporter vehicle (toter) which transports (moves) the Factory-Built home. Escort vehicles are not required to have truck decals. The truck decal is to be placed in a clearly visible location on each door of the vehicle.

ZZ. "Vertical Anchor Tie" - is an anchor tie designed primarily to resist overturning by applying a force to the home or building in a direction no more than 15 degrees from the vertical.

Source: *Miss. Code Ann.* §§ 75-49-1, *et seq.*; 75-49-11 (Supp. 2013).

Rule 5.01.3: Use of Manufacturer's Installation Instructions

All new Factory-Built homes shall be installed in accordance with the manufacturer's home installation instructions. These instructions may include but are not limited to the following details:

1. Skirting must have vents and an opening for access to the crawl space and heat tape outlet.
2. The dryer exhaust vent must terminate outside the home.
3. Combustion air vents may be needed for sealed combustion units and fireplaces.
4. A vapor barrier may be required on the soil.
5. Adequate clearance must be maintained between the soil and wood floor joists.
6. Water supply lines may be required to be insulated.
7. The lot should be properly graded to avoid standing water under the home.
8. The air conditioning condensate drain may be specified to have a termination outside the home.
9. Specifications for utility connections must be followed.

Source: *Miss. Code Ann.* §§ 75-49-1, et seq.; 75-49-11 (Supp. 2013).

Rule 5.01.4: Manufacturer's Installation Instruction Unavailable[1]

A. If the manufacturer's installation instructions are not available, the anchoring and support requirements for used Factory-Built homes of this standard shall be followed and other aspects of the home installation shall conform to the minimum standards for occupancy established by the Rules and Regulations of the Factory-Built Home Division.

B. Factory-Built homes, both new and used, built after July 13, 1994 that conform to Wind Zone I ratings only, cannot be installed within a designated Wind Zone II area, unless approved by the county or municipality having jurisdiction within the Wind Zone II area. The Wind Zone II area for homes Factory-Built after July 13, 1994, consists of the following counties: Hancock, Harrison, Jackson, George, Pearl River, and Stone.

C. For used Factory-Built homes that were built prior to July 13, 1994, the following shall apply, If the Factory-Built home was built to the HUD Hurricane Zone rating that existed prior to July 13, 1994, it may be installed in one of the post-July 13, 1994, counties that are listed in (B) above. For reference, HUD designated Hurricane Zone counties that existed prior to July 13, 1994, were as follows: Hancock, Harrison, Jackson, George, Pearl River, Stone, Greene, Perry, Forrest, Lamar, Marion, Walthall, Pike, Amite, and Wilkinson. However, if the county or municipality having jurisdiction within the post-July 13, 1994, Wind Zone II area has adopted more restrictive requirements that would prohibit the installation of a pre-July 13, 1994 Hurricane Zone house, then the requirements of such county or municipality shall govern.

D. Used Factory-Built homes built prior to 1994, currently installed in a Wind Zone I location and having no accessible or readable data plate to determine the wind zone designation the home cannot be moved to a Wind Zone II location unless it can be proven that the home has a Wind Zone II designation or that the LAHJ in the county to which it is being located will allow it to be installed.

E. Prior to the sales and installation of all new and used Factory-Built homes, the retailer, the developer and/or the installer/transporter shall determine whether the house is constructed to the properly rated Wind/Hurricane zone for its intended use and installation by referring to the HUD data plate. If no accessible or readable data plate is available in the home to verify the Wind/Hurricane zone designation, a copy of the HUD data plate and compliance certificate must be obtained from either the manufacturer of the home or from the Institute for Building Technology and Safety (IBTS). This information must be available to the prospective buyer prior to the sale of the home.

F. The support and anchoring systems of all Factory-Built homes that bear the HUD label shall be designated by a Registered Professional engineer or architect and meet the requirements of 24 CFR Section 3280.306, pursuant to the National Manufactured Housing Construction and Safety Standards Act of 1974, as amended (42 U.S.C. Section 5401, et seq.) and the Manufactured

Housing Improvement Act of 2000 as amended. The manufacturer shall provide complete tie-down instructions with each Factory-Built home.

G. From and after July 1, 2005, no retailer, developer, transporter or installer/transporter shall deliver or cause to be delivered any Factory-Built home to any person at any site where such home is to used for human habitation without anchoring and blocking such home in accordance

with rules, regulations and procedures promulgated by the Commissioner pursuant to *Miss. Code Ann.* § 75-49-5; provided, however, that a period of thirty (30) days from date of delivery shall be allowed for the anchoring and blocking of such homes.

Source: *Miss. Code Ann.* §§ 75-49-1, et seq.; 75-49-11 (Supp. 2013).

Rule 5.01.5: Instructions for Installation of Used Multi-Section Factory-Built Homes

The floor sections, roof sections, and wall sections are to be fitted together tightly. Connections must be sufficiently sealed to prevent air infiltration. Connection of multi-section Factory-Built homes (two or more sections), when manufacturer's installation instructions are not available shall be as follows:

1. Floor connection: All floors of multi-section Factory-Built homes shall be securely fastened together along the entire length of the home.
2. Roof and Ridge Beams: All roof and ridge beams of multi-section Factory-Built homes shall be securely fastened together along the entire length of the home.
3. End walls: End walls of multi section Factory-Built homes shall be securely fastened together with the proper weather seal material installed.
4. Siding and trim pieces are to be installed at the connection of the sections.
5. The joints at the ridge of the roof shall be secured and weather tight.
6. Plumbing drain lines must be supported off the ground.
7. Crossover, heating and other ducts shall be supported at 4 feet on centers minimum and must be supported off the ground.

Source: *Miss. Code Ann.* §§ 75-49-1, et seq.; 75-49-11 (Supp. 2013).

Rule 5.02: Administration

The Commissioner, acting through the Chief Deputy State Fire Marshal and the Factory-Built Home Division of the Mississippi Insurance Department, is hereby charged with the administration of this chapter. He may make and amend, alter or repeal, general rules and regulations of procedure for carrying into effect all provisions of this chapter, for obtaining

statistical data respecting Factory-Built homes, and to prescribe means, methods and practices to make effective such provisions and he may make such investigations and inspection as in his judgment are necessary to enforce and administer this chapter *Miss. Code Ann.* § 75-49-11.

Source: *Miss. Code Ann.* § 75-49-11 (Supp. 2013).

Rule 5.02.1: Rules and Regulations

Rule 5.02.1-1: Licensure of Manufacturers, Developers, Retailers and Installers/Transporters

Each manufacturer, developer, retailer and installer/transporter must be licensed pursuant to *Miss. Code Ann.* § 75-49-9. Any person who knowingly and willfully fails to obtain a license in violation of *Miss. Code Ann.* § 75-49-9 shall be guilty of a misdemeanor and, upon conviction thereof, shall be fined not more than One Thousand Dollars ($1,000.00) or imprisoned not more than one (1) year, or both, pursuant to *Miss. Code Ann.* § 75-49-19 (Supp. 2013).

Source: *Miss. Code Ann.* §§ 75-49-1, et seq.; 75-49-9(7); 75-49-19 (Supp. 2013).

Rule 5.02.1-2: Manufacturer License Application

Every manufacturer engaged in the production (construction) of Factory-Built homes within or without the State of Mississippi shall apply for and obtain a license from the Commissioner. The application for license must be accompanied by proof of financial responsibility for cargo loss or damage by providing documentation of the bonding and liability insurance requirements as required by this regulation.

Source: *Miss. Code Ann.* §§ 75-49-1, et seq.; 75-49-9(7); 75-49-19 (Supp. 2013).

Rule 5.02.1-3: Retailer/Developer License Application

A. Any retailer/developer within or without this state shall apply for a license annually to sell Factory-Built homes to be shipped into or sited in Mississippi. This licensure also applies to anyone who re-builds, sells and/or leases Factory - Built home units or anyone who buys and sells but does not move or relocate repossessed or used Factory-Built homes.

B. Every retailer or developer that sells, transports, or installs new or used Factory-Built homes within the State of Mississippi, shall apply for and obtain a license from the Commissioner. The application for license must be accompanied by proof of financial responsibility for cargo loss or damage by providing documentation of the bonding and liability insurance requirements as

required by this regulation.

Source: *Miss. Code Ann.* §§ 75-49-1, et seq.; 75-49-9(7); 75-49-19 (Supp. 2013).

Rule 5.02.1-4: Repossession and Resale

Any person as defined in *Miss. Code Ann.* § 75-49-3(h) that repossesses and sells new or used Factory-Built homes which will be transported or relocated from the existing home site within the State of Mississippi shall contract the resale of the Factory-Built home through a current licensed retailer or developer to insure that the Factory-Built home is installed and set-up by a licensed installer/transporter in compliance with the Division's rules and regulations. A copy of said contract with the licensed retailer/developer is required to be on file with the Division.

Source: *Miss. Code Ann.* §§ 75-49-1, et seq.; 75-49-9(7); 75-49-19 (Supp. 2013).

Rule 5.02.1-5: Installer/Transporter License Application

Every installer/transporter that transports and/or installs new or used Factory-Built homes within the State of Mississippi shall apply for and obtain a license from the Commissioner. The application for license must be accompanied by proof of financial responsibility for cargo loss or damage by providing documentation of the bonding and liability insurance requirements as required by this regulation.

Source: *Miss. Code Ann.* §§ 75-49-1, et seq.; 75-49-9(7); 75-49-19 (Supp. 2013).

Rule 5.02.1-6: Tax Identification Number

A. All license applicants shall certify in the application to the Commissioner that the applicant will comply with the Construction Standards set forth under Rules and Regulations provided in *Miss. Code Ann.* § 75-49-5, and that the applicant has obtained a current and valid tax identification number.

B. All applications for license shall be obtained from and submitted to the Commissioner on forms prescribed by the Commissioner.

Source: *Miss. Code Ann.* §§ 75-49-1, et seq.; 75-49-9(7); 75-49-19 (Supp. 2013).

Rule 5.02.1-7: License Fees

A. Pursuant to *Miss. Code Ann.* § 75-49-9, the original license fee and all annual renewals thereof shall be Two Hundred Fifty Dollars ($250.00) for manufacturing plants located within or without

the State of Mississippi manufacturing or delivering homes for sale within the State of Mississippi and One Hundred Fifty Dollars ($150.00) per retailer location and developer location within the State of Mississippi. The licensing fee for a Factory-Built home and/or modular independent contractor transporter or installer is One Hundred Dollars ($100.00) for each company. The fee for modular home plan review shall be Four Hundred Dollars ($400.00) per floor plan. Except as otherwise provided in Rule 5.02.1-9, the license shall be valid for the current license period (July 1 through June 30 of the following year) unless suspended or revoked as provided herein.
B. Every manufacturer, transporter or installer or retailer and developer who first sells, manufacturers, transports or installs a new or used Factory-Built home in this state, before such first construction, sale, transportation or installation, shall apply for and obtain a license from the Commissioner. The original license fee, registration fee, annual relicensing, and all other required fees shall be paid to the Commissioner in such a manner as the Commissioner may by rule require. All funds received by the Commissioner shall be deposited in the State Treasury to the credit of the Department of Insurance.

Source: *Miss. Code Ann.* §§ 75-49-1, et seq.; 75-49-9(7); § 75-49-19 (Supp. 2013).

Rule 5.02.1-8: Manufacturer Monitoring Inspection Fee[1]

Every manufacturer of Factory-Built homes in the State shall pay a monitoring inspection fee to the Secretary of Housing and Urban Development, or the Secretary's Agent, for each Factory-Built home produced in the State by the manufacturer. The fee shall be in an amount established by the Secretary pursuant to the National Manufactured Home Construction and Safety Standards Act of 1974, (42 U.S.C.S. 5401, et seq.) and as amended by the Manufactured Housing Improvement Act of 2000. The portion of the fee which is returned to the State shall be deposited by the Commissioner in the State Treasury to the credit of the Department of Insurance.

Source: *Miss. Code Ann.* § 75-49-5 (Supp. 2013).

Rule 5.02.1-9: Investigation and Examination of All License Applicants[1]

A. The Commissioner shall investigate and examine all applicants for all licenses by holding such hearings as he shall deem necessary or conducting investigations or examinations, or any combination thereof, as to the fitness or expertise of the applicant for the type of license for which the applicant applied. A license shall be granted only to a person who bears a good reputation for honesty, trustworthiness, integrity and competency to transact the business in such a manner as to safeguard the interest of the public and only after satisfactory proof of such qualifications has been presented to the Commissioner.

B. The Commissioner shall take all license applicants under consideration after having examined them through oral or written examinations, or both, before granting any license. If the license applicant is an individual, examination may be taken by his personal appearance for examination or by the appearance for examination of one or more of his responsible, full time managing

employees; and if a partnership or corporation or any other type of business or organization, by the examination of one or more of the responsible, full time managing officers or members of the executive staff of the applicant's firm. Every application by an individual for a license to manufacture, sell, transport or install new or used Factory-Built homes, shall be verified by the oath or affirmation of the applicant, and every such application by a partnership or corporation shall be verified by the oath or affirmation of the applicant and a partner or an officer thereof. The applications for licenses shall be in such form and detail as the Commissioner shall prescribe.

C. Pursuant to *Miss. Code Ann.* § 75-49-9(8), which states:

"The commissioner shall take all applicants under consideration after having examined them through oral or written examinations, or both, before granting any license. If the applicant is an individual, examination may be taken by his personal appearance for examination or by the appearance for examination of one or more of his responsible, full-time managing employees…"

D. Every independent contractor installer or transporter who transports or installs new or used Factory-Built homes within the State of Mississippi and who is applying for a license shall have passed a written examination (passing score of 70 or above). The examination shall consist of questions determined by the Commissioner to establish an applicant's knowledge related to the rules and regulations and administration relative to Factory-Built homes in the State of Mississippi and questions specifically related to the practical installation (anchoring, blocking, and tie-down) of Factory-Built homes in this state. The examination shall be provided by the Commissioner or by a testing service acting on behalf of the Commissioner. The applicant is responsible for registering with the testing service to schedule the examination and is responsible for all fees. The applicant shall follow all procedures established with regard to conduct at the examination. Failure to comply with all procedures established with regard to conduct at the examination may be grounds for denial of application.

E. Prior to the issuance of a privilege license, the person applying for the license shall return the license application received in the "Notice of Renewal" and submit a copy of training certificates, that he and all of his responsible, full-time employees has attended an approved eight (8) hour installation and set-up training class pursuant to the Manufactured Housing Improvement Act of 2000.

F. The holder of any valid license issued by the Commissioner at the time *Miss. Code Ann.* § 75-49-9(8) became effective shall be automatically issued an equivalent license in the same category for which his previous license was issued **if the licensee is in compliance** with this chapter.

Source: *Miss. Code Ann.* §§ 75-49-1, et seq.; 75-49-9(7); 75-49-19 (Supp. 2013).

Rule 5.02.1-10: Non-Compliance[1]

A. Non-compliance by a license applicant, as a condition precedent, of the requirements of *Miss. Code Ann.* § 75-49-9(7) and with the regulations set forth in this document, will be assessed violations where applicable.

B. Pursuant to *Miss. Code Ann.* § 75-49-13, the Commissioner shall provide the license holder an opportunity to be heard on the question of these violations committed to determine whether he is qualified to receive the license applied for and if there may be sufficient grounds upon which to base a probation, denial, suspension or revocation of the license.

C. Pursuant to *Miss. Code Ann.* § 75-49-9(10), every license shall be issued annually and shall expire on June 30 following the date upon which it was issued. **License fees shall not be prorated for the remainder of the year in which the application was made but shall be paid for the entire year regardless of the date of the application.**

Source: *Miss. Code Ann.* §§ 75-49-1, et seq.; 75-49-9(7); 75-49-19 (Supp. 2013).

Rule 5.02.1-11: Annual License Renewal Application

A. The Commissioner shall on or before April 30 of each year, forward a "Notice of Renewal" by regular United States mail to each licensee at his or its last known mailing address. The "Notice of Renewal" will contain an application that shall be properly filled out by the person whose name will appear on the license, signed and returned to the State Fire Marshal's Office.

B. After depositing the "Notice of Renewal" in the United States mail, the Commissioner shall have no other duty or obligation to notify the licensee of the expiration of his or its annual license. **The failure of the licensee to obtain a renewal license on or before June 30 of the ensuing license period shall act as an automatic suspension of the license unless the Commissioner, for good cause shown in writing and the payment of an amount equal to double the renewal fee for said delinquency, lifts the suspension and issues the renewal license. During the period of suspension, any practice by the licensee under the color of such license shall be deemed a violation of this chapter**. If a license renewal application is not received from the retailer within thirty (30) days of the date of license suspension, the retailer shall be required to remove or cover-up **all forms** of advertisement (signage) identifying the retail business.

1. All applicants and licensees shall comply with the bonding and general liability requirements as established by *Miss. Code Ann.* § 75-49-11 (Rev. 2008) and as described in Rule 5.02.1-12 of this regulation.

2. Annual renewals of a retailer's license shall require, as a condition precedent, that the retailer verify by oath or affirmation that all retail sales lots that he/or she maintains are done so

in accordance with all rules and regulations promulgated by the Commissioner and that each lot has three (3) or more new or used Factory- Built homes located thereon for retail sale as a residential dwelling or for any other use at the time of application. Annual renewals of a developer's license shall require, as a condition precedent, that the developer verify and submit a copy of legal documentation indicating that the developer has five (5) or more locations for a Factory-Built home/land package.

3. With return of the annual licensure application, **it shall be the responsibility of each retailer, developer and installer/transporter to request in writing the number of truck decals needed for their transporter vehicles** (toter). A decal is to be placed on the driver and passengers doors of each transporter vehicle. Escort vehicles are not required to have decals.

Source: *Miss. Code Ann.* §§ 75-49-1, et seq.; 75-49-9(7); 75-49-19 (Supp. 2013).

Rule 5.02.1-12: Licensee Bonding and Insurance Requirements[1]

A. After August 1, 2009, all new license applications and renewal applications for a license to act as a manufacturer, modular contractor, developer, retailer, transporter, or installer of Factory-Built homes in the State of Mississippi must provide to the State Fire Marshal's Office verification that they have obtained a general commercial liability policy and a surety bond in the following specified amounts:

B. Manufacturers or Modular Contractors - provide proof of a surety bond in the amount of $25,000.00 per Licensed Facility or, for three (3) or more Licensed Facilities, a minimum bond in the amount of $50,000.00; and proof of a general commercial liability policy in the amount of $1,000,000.00 in coverage;

C. Developers - provide proof of a surety bond in the amount of $25,000.00 per Facility or for three (3) or more Facilities, a minimum bond in the amount of $50,000.00; and proof of a general commercial liability policy in the amount of $1,000,000.00 in coverage;

D. Retailer (with 1 or more Facilities) - provide proof of a surety bond in the amount of $25,000.00 per Facility or for three (3) or more Facilities, a minimum bond in the amount of $50,000.00; and proof of a general commercial liability policy in the amount of $1,000,000.00 in coverage;

E. Retailer (involved in the repossession and resale with no lot facilities) – provide proof of a surety bond in the amount of $25,000.00 and proof of general commercial liability in the amount of $1,000,000.00 in coverage.

F. Installer/Transporter - provide proof of a surety bond in the amount of $25,000.00; and proof of a general commercial liability policy in the amount of $500,000.00 in coverage. The general commercial liability policy is also required to have a cargo policy addition in the amount of

$100,000.00 in coverage for the transport of Factory-Built homes.

1. Certificates of general commercial liability policies for all manufacturers, retailer/developers and installer/transporters shall have the Mississippi State Fire Marshal's Office as the designated certificate holder.

2. A surety bond written pursuant to the requirements set forth in this section shall comply with the Surety Bond for Licensure form that will be provided to the applicant from the State Fire Marshal's Office.

Source: *Miss. Code Ann.* §§ 75-49-1, et seq.; 75-49-9(7); 75-49-19 (Supp. 2013).

Rule 5.02.1-13: Operating Without a Privilege License[1]

Any company/individual (retailer, developer or installer/transporter) who is found to be operating without an appropriate privilege license in the State of Mississippi shall:

A. Show good cause in writing to the Factory-Built Home Division of the State Fire Marshal's Office why this violation occurred and include the approximate number of homes sold and or moved prior to obtaining a privilege license.

B. Request a retailer's, developer's, or installer/transporter's privilege license application. This application is to be returned, signed and notarized with a check payable to the Office of the State Fire Marshal pursuant to the fee schedule in Rule 5.02.1-7.

C. Schedule with the State of Mississippi to attend an 8-hr training course and have passed a written examination (passing score of 70 or above).

D. Set an inspection date with the State Fire Marshal's Office which is required to verify compliance with this chapter prior to issuance of license.

E. Be subject to penalties as set forth in *Miss. Code Ann.* § 75-49-19.

Source: *Miss. Code Ann.* §§ 75-49-1, et seq.; 75-49-9(7); 75-49-19 (Supp. 2013).

Rule 5.02.1-14: Installation Inspection[1]

All Factory-Built Homes passing an on-site inspection pursuant to this regulation, shall have a permanently attached serial numbered and color coded installation decal near the HUD label on new or used Factory-Built homes built after June 1976, and opposite the hitch-end of the Factory-Built homes built prior to or on June 1976. **The inspection decal for each Factory-**

Built Home implies acceptance as having been installed in accordance with the manufacturer's specification, the local authority having jurisdiction (LAHJ) in coded areas or in the absence of an installation manual, the State of Mississippi's Rules and Regulations for MH-5.

Source: *Miss. Code Ann.* §§ 75-49-1, et seq.; 75-49-9(7); 75-49-19 (Supp. 2013).

Rule 5.02.1-15: Site Preparation, Anchoring and Blocking Requirement[1]

No retailer, developer, or transporter shall deliver, or cause to be delivered, any Factory-Built home that is to be used for human habitation, to any person at any site without proper site preparation, anchoring and blocking of such home in accordance with the rules, regulations and procedures promulgated by the Commissioner of Insurance.

Source: *Miss. Code Ann.* §§ 75-49-1, et seq.; 75-49-9(7); 75-49-19 (Supp. 2013).

Rule 5.02.1-16: Time Period Allowed for Installation

A period of not more than thirty (30) days from date of delivery to the site shall be allowed for the anchoring and blocking of all Factory-Built homes. No retailer, developer, or installer/transporter shall perform a "Hook and Drop" of any Factory-Built home, originally designed for human habitation, to any installation site. This requirement is provided for in *Miss. Code Ann.* § 75-49-7(2) and Rule 5.02.1-15 of this Regulation.

Source: *Miss. Code Ann.* §§ 75-49-1, et seq.; 75-49-9(7); 75-49-19 (Supp. 2013).

Rule 5.02.1-17: Retailer/Developer Certificate of Inspection Form[1]

A. To ensure compliance with this regulation, it shall be the responsibility of each retailer and developer to submit the Retailer/Developer Certificate of Inspection, the Installer Certificate of Inspection and the Property Locator/Inspection Report form to the Factory- Built Home Division of the State Fire Marshal's Office for **every** Factory-Built home that has been sold and installed. The above listed forms must be received in the State Fire Marshal's Office within seventy-two (72) hours (3 days) of completion of the installation of the home and **not** the sale of the home. The forms enable the duly appointed representative of the State Fire Marshal's Office to conduct inspections as required according to the Division. The information on each page of the Certificate of Installation form must be legible and shall include all of the following information:

1. The retailer's name, license number, address, telephone number, and fax number;

2. The installer/transporter's name, license number, address, telephone number, and fax number;

3. The homeowner's name, address of the home installation site, the homeowner's telephone number, and county where home has been installed.

4. The serial number of home, size of home, HUD number, Wind Zone designation, year/make/model of the home, new or used home designation, and the manufacturer of the home;

5. The date the home was installed;

6. Precise and accurate written directions to the home installation site; using state highway numbers, county road numbers, towns, street names, and road names and distances along each roadway; and

7. A clear and legible map showing directions to the home-site from a known starting point.

B. Nothing contained herein shall restrict or limit the customer's option of independently contracting with a properly licensed transporter or installer for set-up and installation rather than purchasing transportation and installation services from the retailer or developer.

Source: *Miss. Code Ann.* §§ 75-49-1, et seq.; 75-49-9(7); 75-49-19 (Supp. 2013).

Rule 5.02.1-18: Installer Certificate of Inspection Form[1]

A. It shall be the responsibility of each installer/transporter that transports or installs a home at a secondary location to submit, for **every** Factory-Built home, the Installer Certificate of Inspection form and the Property Locator/Inspection Report form to the Factory-Built Home Division of the State Fire Marshal's Office (SFMO). The above listed forms must be received in the SFMO within seventy-two (72) hours (3 days) of completion of the installation of a home. The Installation Property Locator form is to enable the duly appointed representative of the State Fire Marshal's Office to conduct inspections as required according to the Division. **This report is required for all new and used homes that are transported or installed by an installer/transporter for someone other than a licensed retailer or developer**. The information on the forms must be legible and shall include all of the following:

1. The retailer's name, license number, address, telephone number, and fax number (if a retailer transacted the sale of the home to the consumer);

2. The installer/transporter's name, license number, address, telephone number, and fax number;

3. The homeowner's name, address of the home installation site, the homeowner's telephone number, and county where home has been installed.

4. The serial number of the home, size of the home, HUD number, Wind Zone designation,

year/make/model of the home, new or used home designation, and the manufacturer of the home;

5. The date of the home installation;

6. Precise and accurate written directions to the home installation site; using state highway numbers, county road numbers, towns, street names, and road names and distances along each roadway; and

7. A clear and legible map showing directions to the home-site from a known starting point.

B. In all cases in which the installation is arranged and/or paid for by the retailer, the retailer shall assume responsibility for the proper set-up of the Factory-Built home. This subsection shall not relieve any installer/transporter from any responsibilities and applicable penalties.

C. All manufacturers, retailers, developers and installers shall comply with the Mississippi Factory-Built Home Installation Program as set forth in Rule 502.2 of this Regulation. Source:

Miss. Code Ann. §§ 75-49-1, et seq.; 75-49-9(7); 75-49-19 (Supp. 2013).

Rule 5.02.2: Factory-Built Home Installation Inspection Program

This section of the regulation describes the standards and requirements for an installation inspection program for **all** Factory-Built homes sited within the State of Mississippi. Said program shall be called the Mississippi Factory-Built Home Installation Inspection Program (hereinafter "MS Inspection Program").

Source: *Miss. Code Ann.* § 75-49-11 (Supp. 2013).

Rule 5.02.2-1: Purpose

The Commissioner of Insurance, in his duties as State Fire Marshal, pursuant to the authority granted to him by House Bill 1435, 2008 Regular Legislative Session as codified in *Miss. Code Ann.* § 75-49-9(11); *Miss. Code Ann.* § 75-49-11 (Rev. 2008); as well as the provisions of Mississippi Department of Insurance Regulation No. 88-101, said Regulation being the Rules of Practice and Procedure before the Mississippi Insurance Department; and upon agreement between the Mississippi State Fire Marshal's Office, Factory-Built Home Division ("Division") and the Department of Housing and Urban Development ("HUD"), which requires the Division to conduct installation inspections of Factory-Built Homes from and after July 1, 2009.

Source: *Miss. Code Ann.* §§ 75-49-1, et seq.; 75-49-11 (Supp. 2013).

Rule 5.02.2-2: Scope

The inspection program shall apply to **all Factory-Built homes** sited within the State of Mississippi installed on or after July 1, 2009.

Source: *Miss. Code Ann.* §§ 75-49-1, et seq.; 75-49-11 (Supp. 2013).

Rule 5.02.2-3: Mississippi Factory-Built Home Installation Program Standards

The Mississippi Factory-Built Home Installation Program Standards (hereinafter "MS Installation Standards") shall be the standards and requirements as set forth by the National Manufactured Housing Construction and Safety Standards Act of 1974, as amended (42 USCS 5401 et seq.) and as amended by the Manufactured Housing Improvement Act of 2000, as same may be revised and amended; and Mississippi Department of Insurance Regulation MH-5, as amended.

Source: *Miss. Code Ann.* §§ 75-49-1, et seq.; 75-49-11 (Supp. 2013).

Rule 5.02.2-4: Installation Inspection Requirements[1]

A. Beginning July 1, 2009, every Factory-Built home that is sited within the State of Mississippi shall be subject to inspection under the MS Inspection Program prior to occupation. Said inspection shall be conducted by an inspector assigned by the State Fire Marshal's Office to verify that the installation of the Factory-Built home meets the MS Installation Standards.

B. Furthermore, each retailer/developer and/or installer/transporter shall certify, by submitting a Certificate of Inspection Form to the State Fire Marshal's Office indicating that they have installed said Factory-Built home in accordance with the requirements set forth by the MS Installation Standards and this Regulation.

Source: *Miss. Code Ann.* § 75-49-1, *et seq.*; § 75-49-11 (Supp. 2013).

Rule 5.02.3: Installation Inspection Procedure

Rule 5.02.3-1: Scheduling of the Inspection[1]

A. For all new or used residential Factory-Built homes involving a retailer, the retailer is required within three (3) business days of the completion of the installation, minus skirting, to submit by e-mail, facsimile, or priority mail, a properly completed and signed Retailer/Developer Certificate of Inspection, Installer/Transporter Certificate of Inspection, and Property Locator /Inspection Report Form to the Factory-Built Home Division of the State Fire Marshal's Office. This will provide information on the exact location where the home has been installed.

B. For secondary sitings not involving a retailer, the installer/transporter is required to submit within three (3) business days of the completion of the installation, minus skirting, by e- mail,

facsimile, or priority mail, all the proper pages of a properly completed and signed Installer/Transporter Certificate of Inspection and the Property Locator /Inspection Form to the Factory-Built Home Division of the State Fire Marshal's Office, for **all** Factory-Built homes. This will provide information on the exact location of the home and when the home has been installed.

Source: *Miss. Code Ann.* §§ 75-49-5; 75-49-9; 75-49-11 (Supp. 2013).

Rule 5.02.3-2: Inspection Fees

The State Fire Marshal has set a reasonable standard fee, which shall not be more than an amount allowed by HUD, for said inspection. The fee shall be paid by the installer/transporter, developer, or retailer. The State Fire Marshal will not charge the fee to the purchaser of the Factory-Built home. Inspection fee invoices shall be sent to the installer/transporter upon receipt of the Installer Certificate of Inspection Form. The payment for the inspection fees, including the remittance portion of the invoices, shall be promptly returned to the State Fire Marshal's Office. Failure to submit payment of the inspection fee invoices within 45 days from the date on the invoice shall be considered a violation of this regulation.

Source: *Miss. Code Ann.* §§ 75-49-5; 75-49-9; 75-49-11 (Supp. 2013).

Rule 5.02.3-3: Contract Rights Not Affected[1]

Failure to arrange for an inspection of a home within three (3) business days of the completed installation will not affect the validity or enforceability of any sale or contract for the sale of any Factory-Built home.

Source: *Miss. Code Ann.* §§ 75-49-5; 75-49-9; 75-49-11 (Supp. 2013).

Rule 5.02.3-4: State and Local Permits

All necessary permit requirements under state law shall be obtained prior to installation.

Source: *Miss. Code Ann.* §§ 75-49-5; 75-49-9; 75-49-11 (Supp. 2013).

Rule 5.02.3-5: Inspection Checklist[1]

The installation of every Factory-Built home shall be inspected for each of the installation elements included in the checklist portion of the Property Locator/Inspection Report of the Installer Certificate of Inspection Form. The checklist must include assurance that all of the inspection elements comply with the MS Installation Standards. All deviations from the items listed on the checklist must be noted in the comment section of the checklist to alert the inspector of the existing condition.

Source: *Miss. Code Ann.* §§ 75-49-5; 75-49-9; 75-49-11 (Supp. 2013).

Rule 5.02.4: Certification of Installation

Rule 5.02.4-1: Certificate of Inspection

When the installation work is complete, the retailer and/or installer/transporter shall certify by signature at the bottom of the Retailer/Developer and/or the Installer/Transporter Certificate of Inspection, devised for reprint purposes, that:

A. The Factory-Built home has been installed in accordance with:

1. An installation design and instructions that have been provided by the manufacturer and approved by the Secretary for Housing and Urban Development directly or through review by the DAPIA; or,

2. An installation design and instructions that have been prepared and certified by a professional engineer or registered architect, that have been approved by the manufacturer and the DAPIA as providing a level of protection for residents of the home that equals or exceeds the protection provided by in MH-5, as amended.

3. If the installation instructions do not comply with the installation standards, the manufacturer is responsible for any aspect of installation that is completed in accordance with the installation instructions and that does not comply with the installation standards.

4. If a Factory-Built home is classified as "used" and the manufacturer instructions cannot be located, the installer/transporter shall comply with the provisions of this regulation, as amended, in installing the Factory-Built home.

5. Upon completion of the inspection, where the inspector has verified the installation as proper and has passed the home, a signed Certificate of Inspection will be sent to the homeowner and to the installer/transporter and to the retailer when applicable. This certificate is verification that the installation of the home has passed a final inspection.

Source: *Miss. Code Ann.* §§ 97-7-10; 75-49-7(2); 75-49-19; 75-49-11; 75-49-1 et seq. (Supp. 2013).

Rule 5.02.4-2: Procedures for Re-inspection Upon Failure to Pass[1]

A. If the inspector cannot verify the proper installation of the Factory-Built home, the inspector must immediately notify the company submitting the Certificate of Installation of any failures to comply with the installation standards and provide a written explanation (letter and affidavit) with the reasons why the inspector cannot approve the installation. If the installation is a secondary move the installer/transporter will receive the letter and affidavit. The responsible person shall have twenty (20) calendar days to correct the defects found during the inspection and return the signed and notarized affidavit to the State Fire Marshal's Office indicating that all the listed defects have been corrected. After the installation is corrected and the notarized affidavit has been returned, the installation will be re-inspected by an inspector before verification can be issued. Submission of a signed and notarized affidavit by a manufacturer, developer, retailer or installer/transporter that are not factually correct are considered to be a violation of *Miss. Code Ann.* § 97-7-10.

B. If the manufacturer, developer or retailer retains the installer/transporter, they are jointly and severally responsible with the installer/transporter for correcting installation defects.

Source: *Miss. Code Ann.* §§ 97-7-10; 75-49-7(2); 75-49-19; 75-49-11; 75-49-1 et seq. (Supp. 2013).

Rule 5.02.4-3: Cost of Re-inspection

A failed installation will require a re-inspection following the correction of the identified defects and may be assessed a re-inspection fee. The cost of that re-inspection will be paid by the installer/transporter or, if the installer/transporter was retained by the manufacturer, developer or retailer, by that individual or entity and, absent a written agreement with the purchaser that specifically states otherwise, that cost cannot be charged to the purchaser of the Factory-Built home. The re-inspection fee shall be reasonable and shall not exceed the cost of the original inspection fee.

Source: *Miss. Code Ann.* §§ 97-7-10; 75-49-7(2); 75-49-19; 75-49-11; 75-49-1 et seq. (Supp. 2013).

Rule 5.02.4-4: Scheduling of Re-inspection

Within three (3) business days following completion of all work to correct the installation deficiencies, the installer/transporter must contact the Fire Marshal's Office to arrange for the re-inspection of the home installation site. Such inspection shall be performed as soon as practicable by an inspector.

Source: *Miss. Code Ann.* §§ 97-7-10; 75-49-7(2); 75-49-19; 75-49-11; 75-49-1 et seq. (Supp. 2013).

Rule 5.02.4-5: Inspection Decal[1]

A. Upon passing of final inspection, the inspector shall permanently attach a color-coded serial numbered inspection decal near the HUD label on new or used Factory-Built homes built after June 1976, and opposite the hitch-end of Factory-Built homes built prior to or on June 1976, as proof that the Factory-Built home installation meets the MS Installation Standards as set forth in this regulation.

B. The State Fire Marshal's Office will supply inspection decals to each inspector. Each decal will have the installer/transporter's name, date of installation and license number, and will bear the following statement:

THIS MANUFACTURED, MOBILE OR MODULAR HOME HAS BEEN INSTALLED IN COMPLIANCE WITH THE UNIFORM STANDARDS CODE FOR THE FACTORY-BUILT HOMES LAW. ANYONE TAMPERING WITH OR REMOVING THIS INSPECTION DECAL FROM THIS UNIT WILL BE PROSECUTED AS SET FORTH IN THESE RULES AND REGULATIONS, AND SHALL BE SUBJECT TO SUSPENSION OR REVOCATION OF THEIR PRIVILEGE LICENSE. (SECTION 75-49-1 ET SEQ., CODE OF MISSISSIPPI (1972), AS AMENDED)

Source: *Miss. Code Ann.* §§ 97-7-10; 75-49-7(2); 75-49-19; 75-49-11; 75-49-1 et seq. (Supp. 2013).

Rule 5.02.4-6: Inspector Qualifications

Any person who is a Deputy State Fire Marshal may conduct inspections pursuant to this Regulation. Furthermore, the State Fire Marshal’s Office may designate and authorize persons or entities to conduct these inspections provided they meet the following qualifications.

A. Any individual or entity who meets at least one of the following qualifications may be designated or authorized by the State Fire Marshal to review the work and verify the installation of a Factory-Built home:

1. A professional engineer;

2. A registered architect;

3. A HUD-accepted Production Inspection Primary Inspection Agency (IPIA) or a Design Approval Primary Inspection Agency (DAPIA);

4. An International Code Council certified inspector; or

5. Any person or entity who has three (3) years or more experience in inspecting homes or experience in the Factory-Built home industry provided the Commissioner finds to his satisfaction that said person or entity is qualified and competent to fulfill the responsibilities of an inspector.

B. The inspector must be independent of the manufacturer, the retailer, the installer/transporter, and any other person that has a monetary interest, other than collection of an inspection fee, in the completion of the sale of the home to the purchaser.

C. The Commissioner may, in writing, suspend or revoke an inspector's authority to inspect Factory-Built home installations for cause. In deciding whether to suspend or revoke an inspector's authority to conduct such installation inspections, the Commissioner may consider the impact of the suspension or revocation on other affected parties and will seek to assure that the sales and siting of Factory-Built homes are not unduly disrupted.

Source: *Miss. Code Ann.* §§ 97-7-10; 75-49-7(2); 75-49-19; 75-49-11; 75-49-1 et seq. (Supp. 2013).

Rule 5.02.4-7: Verification of Installer/Transporter License

If the retailer/developer or manufacturer agrees to provide any transportation and/or set up in connection with the sale of a Factory-Built home, the retailer/developer or manufacturer must verify with the Mississippi State Fire Marshal's Office that the installer/transporter is licensed pursuant to *Miss. Code Ann.* § 75-49-9. The retailer/developer and or manufacturer shall forward a copy of the current license and the signed contract with each installer/transporter to the Division office.

Source: *Miss. Code Ann.* §§ 97-7-10; 75-49-7(2); 75-49-19; 75-49-11; 75-49-1 et seq. (Supp. 2013).

Rule 5.02.4-8: Site Preparation by Homeowner

The manufacturer, retailer or installer/transporter may agree in writing to allow the consumer to conduct the site preparation for the Factory-Built home installation. However, before the installer/transporter may begin installation of the Factory-Built home, the site preparation must meet the requirements set forth in MH-5, as amended. If there is conflict between the installer/transporter and the consumer regarding the site preparation, the State Fire Marshal's Office may be required to mediate. Any fee charged by the State Fire Marshal's Office due to said mediation will be paid by the consumer.

Source: *Miss. Code Ann.* §§ 97-7-10; 75-49-7(2); 75-49-19; 75-49-11; 75-49-1 et seq. (Supp.

2013).

Rule 5.02.4-9: Waiver of Rights Invalid[1]

Any provision of a contract or agreement entered into by a Factory-Built home purchaser that seeks to waive any recourse under the MS Installation Program is void, except a waiver provision may be allowed for any agreement entered into pursuant to the provisions of Rule 5.02.4-8 of this Regulation.

Source: *Miss. Code Ann.* §§ 97-7-10; 75-49-7(2); 75-49-19; 75-49-11; 75-49-1 et seq. (Supp. 2013).

Rule 5.02.4-10: Violations and Penalties

Failure of a retailer/developer or installer/transporter or both to comply with a material provision of this Regulation is considered a violation of *Miss. Code Ann.* § 75-49-7(2). The State Fire Marshal may deny a license application or suspend or revoke a license, or may impose an administrative fine, or both as provided in *Miss. Code Ann.* § 75-49-19, after giving notice of hearing to the applicant or licensee by serving a written statement of charges on the licensee at least twenty (20) days prior to hearing, in the manner provided for in *Miss. Code Ann.* § 75-49-13 for any violation of this Regulation.

Source: *Miss. Code Ann.* §§ 97-7-10; 75-49-7(2); 75-49-19; 75-49-11; 75-49-1 et seq. (Supp. 2013).

Rule 5.02.5: License Exceptions

Pursuant to *Miss. Code Ann.* §75-49-5, the following entities or individuals are not required to have a privilege license:

A. An individual relocating and installing a Factory-Built home only within the boundaries of their personal property (defined as “Self-Set”), is the owner thereof, or the Factory-Built home is owned by a member of the individual's family, and the home is not intended for sale, exchange, lease or rent. Further, the installation of the home must meet the requirements set forth in this Regulation pertaining to the proper anchoring and blocking of the Factory-Built home. Any transportation of the home by an unlicensed individual upon a public right of way from another property not directly adjoining the destination property shall constitute a direct violation of this Regulation. The transportation of any Factory-Built home upon a public right of way shall require

a licensed installer/transporter to provide this service.

B. An individual performing maintenance, repairs, or corrections to an installation for the purpose of customer service on behalf of manufacturers, retailers or developers;

C. An installer/transporter that conducts interstate transport through the State of Mississippi for manufacturers, retailers or developers and does not install at home sites intended for human habitation.

Source: *Miss. Code Ann.* §75-49-5 (Supp. 2013).

Rule 5.02.6: Manufacturer Qualifications for License

A. All manufacturer applicants shall certify in the application that they will fully comply with 24 CFR 3280 and CFR 3282 of the National Manufactured Home Construction Safety Standards Act of 1974, (42 U.S.C.S. 5401 et seq.) and as amended by the Manufactured Housing Improvement Act of 2000, set forth pursuant to *Miss. Code Ann.* § 75-49-5 and 75-49-11.

B. All manufacturers of modular homes shall certify in the application that they will fully comply with the Regulation Number ME-2 for the Uniform Standards Code for the Factory-Built Homes Law as Related to Modular Homes.

Source: *Miss. Code Ann.* §§ 75-49-5; 75-49-11 (Supp. 2013).

Rule 5.02.7: Retailer Qualifications for License[1]

A. In order to protect the health, safety and welfare of the public of this state, each applicant for a retailer's license shall:

1. Demonstrate to the Commissioner that he has a good general working mechanical knowledge of Factory-Built home construction and repair;

2. Demonstrate to the Commissioner that he has a good practical working knowledge of the manner in which Factory-Built homes are anchored and blocked in accordance with rules, regulations and procedures promulgated by the Commissioner;

3. Demonstrate to the Commissioner that he shall have or has adequate facilities for the installation, repair and servicing of Factory-Built homes and storage of parts and accessories and has at least one operable service truck. If, however, the retailer is contracting out all installation, repair and service, then he shall provide a duplicate of the executed contract to the Commissioner and said contract shall contain a clause stating that the Commissioner shall be notified (30) days

in advance of its cancellation.

4. Demonstrate to the Commissioner that he has adequate space to display his Factory-Built homes at each sales lot and that he has or shall maintain a permanent sales office located at each of those sales lots with running water and sewer facilities for public comfort and convenience and to comply with the county health department regulations and other applicable safety standards for a permanent sales site in the county or municipality in which they are located. Prior to the issuance of the license, the physical location of the retail lot will be inspected by a representative of the Factory-Built Homes Division of the State Fire Marshal's Office to certify that the facilities meet the standards set forth by this Regulation.

5. Demonstrate to the Commissioner that he shall maintain full compliance with all bonding and insurance requirements for the entire licensure period.

Source: *Miss. Code Ann.* §§ 75-49-5; 75-49-11 (Supp. 2013).

Rule 5.02.7-1: Temporary Promotional Retail Sales Activity

Nothing in this regulation shall prohibit a licensed Mississippi permanent retailer sales center from conducting a temporary promotional activity to retail consumers at a location other than its licensed permanent retailer location center so long as:

A. The activity does not exceed seventeen (17) consecutive days in duration and is not repeated at that location within the next six (6) months;

B. The activity is within the county in which the retailer sales center has a permanent license or within fifty (50) miles radius of the location of the permanent licensed Mississippi sales center location, whichever is greater;

C. The temporary promotional site has:

1. Running water and sewer facilities for public comfort and convenience and to comply with the health and safety standards as well as other local ordinance requirements for a temporary sales site in the county or municipality in which the site is located;

2. If running water and sewer facilities are not fully accessible to the public at the site during the operation of the promotional event, then other arrangements must be made to ensure compliance with Rule 5.02.7-1(C)(1);

3. The temporary promotional site has a sign at least four (4) feet by eight (8) feet in size with lettering at least twelve (12) inches high advising the public that this is a temporary location and designating the address of the permanent licensed sales center retailer location, with the sign to be prominently located on the temporary promotional site for viewing by the public. This sign cannot

be placed on a public right-of-way, and it must be placed in the display area where the event is held;

4. There is adequate space to display the Factory-Built homes at the temporary promotional site, and;

5. The license must be granted by the Commissioner for each temporary promotional site where employees or agents of the retailer meet the public regardless of whether or not sales will be made on site;

6. The licensed Mississippi retailer shall provide a thirty (30) day advance notice to the Factory-Built Home Division of the State Fire Marshal's Office for the purpose of license application, all counties or municipalities, permits and site inspection. The license will only be good for the seventeen (17) day time-frame requested.

7. The licensed Mississippi retailer shall submit its application for a license to the Factory-Built Home Division of the State Fire Marshal's Office at least thirty (30) days prior to the proposed effective date of the temporary promotional event. The failure to submit the license application at least thirty (30) days in advance can serve as a basis for denial of a license. Any license issued will only be valid for the seventeen (17) day time-frame or any shorter period of time requested. Any license issued will only be effective for that period of time [actual days] in which sales are actively solicited or the period of time in which the homes are promoted by the retailer.

Source: *Miss. Code Ann.* §§ 75-49-5; 75-49-11 (Supp. 2013).

Rule 5.02.7-2: Safeguarding the Public Interest

A retailer or developer may be required to demonstrate to the Commissioner that he has a good general knowledge of and will comply with the requirements of the National Manufactured Home Construction and Safety Standards Act of 1974, (42 U.S.C.S. 5401 et seq.), as amended, and as amended by the Manufactured Housing Improvement Act of 2000 and the rules and regulations promulgated by the Department of Insurance for the State of Mississippi and by the Department of Housing and Urban Development as they pertain to the responsibilities of a retailer to properly safeguard the public interest. No retailer or developer shall make use of transportation affecting interstate or foreign commerce or the mails to sell, lease, or offer for sale or lease in the State of Mississippi any Factory-Built home not in conformity with the aforesaid standards unless the developer or retailer, acting as a reasonable developer or retailer, does not know that the Factory-Built home does not conform to applicable standards. This prohibition of sale applies to any affected Factory-Built homes until the completion of the entire sales transaction. **A sales transaction with a purchaser is considered completed when all the goods and services, that the retailer has agreed to provide at the time the contract was entered into, have been provided**. Completion of a retail sale will be at the time the retailer completes setup of the

Factory-Built home if the retailer has agreed to provide setup. If the retailer has not agreed to transport or setup the Factory-Built home, this prohibition of sale does not apply.

Source: *Miss. Code Ann.* §§ 75-49-5; 75-49-11 (Supp. 2013).

Rule 5.02.7-3: Training Requirements

A. The retailer shall ensure that within one (1) year of employment, all sales staff will attend eight (8) hours training and thereafter, attend eight (8) hours training every three (3) years to be approved and/or provided by the Factory-Built Home Division. (Display current training certificates of all sales staff at the retailer's current business location.) The employer of sales staff is responsible for submitting in writing to the Factory-Built Home Division a list of all sales staff and their date of employment.

B. A retailer that employs their own installation staff shall ensure that within six (6) months of employment all the installation staff will attend an introductory eight (8) hour training seminar and thereafter, attend eight (8) hours training each year provided by the Factory- Built Home Division. The employer of the installation staff is responsible for submitting in writing to the Factory-Built Home Division a list of all the installation staff and their date of employment, which is due at the time of license renewal.

C. With the submittal of the annual renewal application, all copies of approved certificates of training shall be submitted by the retailer license holder for themselves, their sales staff and installation staff to the Factory-Built Home Division and affirmation in writing, as required by the Division, as having three (3) Factory-Built homes on retail lot.

Source: *Miss. Code Ann.* §§ 75-49-5; 75-49-11 (Supp. 2013).

Rule 5.02.7-4: Vehicle Decals

With the submittal of the annual renewal application, it shall be the responsibility of each licensed retailer to request in writing the number of truck decals needed for their transporter (toter) vehicles. A decal is to be placed on the driver and passengers doors of each transporter vehicle. Escort vehicles are not required to have decals.

Source: *Miss. Code Ann.* §§ 75-49-5; 75-49-11 (Supp. 2013).

Rule 5.02.7-5: Retail Lot Display and Temporary Storage[1]

A. All Factory-Built homes displayed or stored on a retail lot for periods longer than 30 days shall be stabilized as described below and to such a degree as to not allow damage to occur while

the home is present on the lot.

B. All new Factory-Built homes at the retail location shall be temporarily blocked as required in the "Display and Storage Instructions of the Home" section of the manufacturer's installation manual.

C. For all used Factory-Built homes at a retail location, piers shall consist of a minimum of three (3) piers and are to be located under each I-beam, one at each end of the home and one in front of each axle area. The piers shall be located no further than 2 feet from each end and approximately at the center of the home.

D. For all multi-section Factory-Built homes at a retail location, any opening within the marriage wall greater than 48 inches shall have a pier installed at each side of the opening.

E. Any exterior door opening, regardless of the width of the home, shall have a pier at each side of the opening. All patio doors and windows greater than 48 inches shall have a pier installed at each side of the opening.

Source: *Miss. Code Ann.* §§ 75-49-5; 75-49-11 (Supp. 2013).

Rule 5.02.7-6: Inspection of Retail Lot Units and Records[1]

A. Upon request of the State Fire Marshal Deputy, while conducting a regularly scheduled lot inspection, all licensed retail lot owners shall be required to provide documentation or records for each of the new and used homes present. The documentation for each home shall include the identifying numbers (HUD numbers and Serial Numbers) and a delivery invoice indicating the date that the home was delivered to the retail lot location.

B. All homes on the retail lot that have been on display and/or stored for longer than 30 days and that have been found not to be properly stabilized as described above shall be marked with a "Non-Compliance" tag. The tag will remain attached to the unit until such time as it has been properly stabilized. If the home is a new home, a damage assessment shall be conducted by the manufacturer of the home and a letter on the findings shall be filed with the retailer's files on the home and with the State Fire Marshal's Office. The "Non- Compliance" tag may only be removed by the State Fire Marshal's Office at such time of notification that the home has been properly stabilized and that a damage assessment has been complete.

Source: *Miss. Code Ann.* §§ 75-49-5; 75-49-11 (Supp. 2013).

Rule 5.02.8: Developer Qualifications for License

In order to protect the health, safety and welfare of the public of this state, each applicant for a developer's license shall:

A. Demonstrate to the Commissioner that he has a good general working mechanical knowledge of Factory-Built home construction and repair;

B. Demonstrate to the Commissioner that he has a good practical working knowledge of the manner in which Factory-Built homes are anchored and blocked in accordance with rules, regulations and procedures promulgated by the Commissioner;

C. Demonstrate to the Commissioner that he shall have or has adequate facilities for the repair and servicing of Factory-Built homes and storage of parts and accessories and has at least one operable service truck. If, however, the developer is contracting out all installation, repair and service, then he shall provide a duplicate of the executed contract to the Commissioner and said contract shall contain a clause stating that the Commissioner shall be notified thirty (30) days in advance of its cancellation.

D. Demonstrate to the Commissioner that he has an adequate space to display his Factory- Built homes at each development site and that he has or shall maintain a permanent sales/business office within the State of Mississippi with running water and sewer facilities for public comfort and convenience and to comply with the county health department regulations and other applicable safety standards for a permanent structure in the county or municipality in which they are located. Prior to the issuance of the license the physical location of the developers retail office will be inspected by a representative of the Factory-Built Homes Division of the State Fire Marshal's Office to certify that the facilities are up to standards set forth by this regulation.

E. Demonstrate to the Commissioner that he shall maintain full compliance with all bonding and insurance requirements for the entire licensure period.

Source: *Miss. Code Ann.* §§ 75-49-5; 75-49-11 (Supp. 2013).

Rule 5.02.8-1: Safeguarding the Public Interest

A retailer or developer may be required to demonstrate to the Commissioner that he has a good general knowledge of and will comply with the requirements of the National Manufactured Home Construction and Safety Standards Act of 1974, (42 U.S.C.S. 5401 et seq.), as amended, and as amended by the Manufactured Housing Improvement Act of 2000 and the rules and regulations promulgated by the Department of Insurance for the State of Mississippi and by the Department of Housing and Urban Development as they pertain to the responsibilities of a retailer to properly safeguard the public interest. No retailer or developer shall make use of transportation affecting interstate or foreign commerce or the mails to sell, lease, or offer for sale or lease in the State of Mississippi any Factory-Built home not in conformity with the aforesaid standards unless the

developer or retailer, acting as a reasonable developer or retailer, does not know that the Factory-Built home does not conform to applicable standards. This prohibition of sale applies to any affected Factory-Built homes until the completion of the entire sales transaction. **A sales transaction with a purchaser is considered completed when all the goods and services, that the retailer has agreed to provide at the time the contract was entered into, have been provided**. Completion of a retail sale will be at the time the retailer completes setup of the

Factory-Built home if the retailer has agreed to provide setup. If the retailer has not agreed to transport or setup the Factory-Built home, this prohibition of sale does not apply.

Source: *Miss. Code Ann.* §§ 75-49-5; 75-49-11 (Supp. 2013).

Rule 5.02.8-2: Training Requirements[1]

A. The developer shall ensure that within one (1) year of employment, all sales staff will attend eight (8) hours training, and thereafter, attend eight (8) hours training every three (3) years to be approved and/or provided by the Factory-Built Home Division. (Display current training certificates of all sales staff at the developer's current business location.) The employer is responsible for submitting in writing to the Factory-Built Home Division a list of all sales staff and their date of employment, which is due at the time of license renewal.

B. A developer that employs their own installation staff shall ensure that within six (6) months of employment all the installation staff will attend an introductory eight (8) hour training seminar and thereafter, attend eight (8) hours training each year provided by the Factory-Built Home Division. The employer of the installation staff is responsible for submitting in writing to the Factory-Built Home Division a list of all the installation staff, copies of training certificates and their date of employment.

C. With the submittal of the annual renewal application, all copies of approved certificates of training shall be submitted by the developer license holder, for their sales staff and their installation staff, to the Factory-Built Home Division and affirmation in writing, as required by the Division, as having five (5) Factory-Built home sites available.

Source: *Miss. Code Ann.* §§ 75-49-5; 75-49-11 (Supp. 2013).

Rule 5.02.8-3: Vehicle Decals

With annual renewal application, it shall be the responsibility of each developer to request in writing the number of truck decals needed for their transporter (toter) vehicles. A decal is to be placed on the driver and passengers doors of each transporter vehicle. Escort vehicles are not required to have decals.

Source: *Miss. Code Ann.* §§ 75-49-5; 75-49-11 (Supp. 2013).

Rule 5.02.9: Installer/Transporter Qualification for License

In order to protect the Health, Safety and Welfare of the public of this State, each applicant for an installer/transporter license shall:

A. Demonstrate to the Commissioner that he has a good general working mechanical knowledge of Factory-Built home construction and repair;

B. Demonstrate to the Commissioner that he has a good practical working knowledge of the manner in which Factory-Built homes are anchored and blocked, in accordance with rules, regulations and procedures promulgated by the Commissioner and the National Manufactured Home Construction and Safety Standards Act of 1974, (42 U.S.C.S. 5401 et seq.), as amended and the Manufactured Housing Improvement Act of 2000.

C. Demonstrate to the Commissioner that he shall maintain full compliance with all bonding and insurance requirements for the entire licensure period.

Source: *Miss. Code Ann.* §§ 75-49-5; 75-49-11 (Supp. 2013).

Rule 5.02.9-1: Safeguarding the Public Interest

Demonstrate to the Commissioner that he has a good general knowledge of and will comply with the requirements of the National Manufactured Home Construction and Safety Standards Act of 1974, (42 U.S.C.S. 5401 et seq.), as amended, and the Manufactured Housing Improvement Act of 2000, and the rules and regulations promulgated by the Department of Housing and Urban Development as they pertain to the responsibilities of installers or transporters to properly safeguard the public interest.

Source: *Miss. Code Ann.* §§ 75-49-5; 75-49-11 (Supp. 2013).

Rule 5.02.9-2: State and Local Compliance Requirements

Demonstrate to the Commissioner that he is in full compliance with the Mississippi Department of Transportation (MDOT) and any local requirements pertaining to the transportation of Factory-Built homes;

Source: *Miss. Code Ann.* §§ 75-49-5; 75-49-11 (Supp. 2013).

Rule 5.02.9-3: Training Requirements[1]

Demonstrate to the Commissioner that **the licensee and all employees** engaged in installation/set-up will attend eight (8) hours of training per licensing year (July 1 to June 30) as provided by, approved by, or recommended by the Factory-Built Home Division of the State Fire Marshal's Office. The Commissioner of Insurance or the State Chief Deputy Fire Marshal may at his discretion consent to reciprocity for training of licensees with other states that has established training programs that meet or exceed the National Manufactured Home Construction and Safety Standards Act or State of Mississippi requirements of this chapter. The licensee is responsible for submitting in writing to the Factory-Built Home Division a list of all employees, copies of training certificates and their date of employment, which is due at the time of license renewal.

A. Demonstrate to the Commissioner that he has passed a written examination (passing score of 70 or above) provided by the Commissioner or by a testing service acting on behalf of the Commissioner to establish an applicant's knowledge related to the rules and regulations and administration relative to Factory-Built homes in the State of Mississippi and questions specifically related to the practical installation (anchoring, blocking, and tie-down) of Factory-Built homes in this state.

B. Demonstrate to the Commissioner that he has obtained his approved eight (8) hour installation and set-up training certificate to the Factory-Built Home Division pursuant to the Manufactured Housing Improvement Act of 2000.

C. All installer/transporters and employees who install new or used Factory-Built homes or modular homes shall be required to maintain a copy of their recent training certificate or a currently valid ID card in all trucks (toters) or on their person and be able to produce such document upon demand by a Deputy State Fire Marshal.

D. All installer/transporters who install new or used Factory-Built homes or modular homes shall, at all times, be required to have a minimum of one employee on the installation crew who has completed the annual training requirement and that said person is in possession of a currently valid ID card.

Source: *Miss. Code Ann.* §§ 75-49-5; 75-49-11 (Supp. 2013).

Rule 5.02.9-4: Contract Requirement

All installer/transporters who conducts secondary moves of Factory-Built homes **shall have a written contract with the consumer** and that the installer/transporter will maintain a copy of the said contract on file for a period of not less than three (3) years available for random inspections by the Factory-Built Home Division pursuant to Section 75-49-5, Code of Mississippi (1972);

Source: *Miss. Code Ann.* §§ 75-49-5; 75-49-11 (Supp. 2013).

Rule 5.02.9-5: Vehicle Decals

All installer/transporters who install new or used Factory-Built homes or modular homes shall be required to display a current license period decal on all trucks (toters). The current vehicle decals will be issued by the State Fire Marshal's Office/Factory-Built Home Division, based upon the number requested by the licensee at time of license renewal. The request must also include the vehicle VIN numbers and the vehicle license numbers for each of the transport trucks to which the decals will be attached. The color of the decals shall denote the current licensing period. A decal must be placed on the driver's door and the passenger's door of the vehicle in plain view to verify current license.

Source: *Miss. Code Ann.* §§ 75-49-5; 75-49-11 (Supp. 2013).

Rule 5.02.9-6: Monthly Installation Report

All installer/transporters shall complete a monthly installation report, for **all** secondary Factory-Built home installations, on a form provided by the Factory-Built Home Division of the State Fire Marshal's Office and file it with the Fire Marshal's office no later than the tenth day of the month denoting the previous month's installations. This report shall include the name of the installer/transporter, the name and address of the owners of the home (and location of the home if different), and the name of the person or persons who hired the installer/transporter. Reports shall be submitted even when no homes were installed during the reporting period.

Source: *Miss. Code Ann.* §§ 75-49-5; 75-49-11 (Supp. 2013).

Rule 5.02.9-7: Recordkeeping

The installer/transporter must retain the following for a period of three (3) years after certification of installation is received:

A. A record of the name and address of the purchaser or other person with whom the installer/transporter contracted for the installation work and the address of the home installed;

B. A copy of the contract pursuant to which the installer/transporter performed the installation work for the homeowner;

C. A copy of any notice or affidavit from an inspector disapproving the installation work;

D. A copy of the installer/transporter's certification of installation in accordance with the

MS Installation Standards as set forth in this Regulation, as amended; and,

E. A copy of foundation designs used to install the Factory-Built home, if different from the designs provided by the manufacturer, including evidence that the foundation designs and instructions were certified by a professional engineer or registered architect, including the name, address, and telephone number of the professional engineer or architect certifying the designs.

Source: *Miss. Code Ann.* §§ 75-49-5; 75-49-11 (Supp. 2013).

Rule 5.02.9-8: Responsibility for Transportation Damage

A. The installer/transporter and/or business with which the installer/transporter is employed will be responsible for all safety related damages to the Factory-Built home while it is in the care, custody and/or control of said installer/transporter.

B. Any Factory-Built home abandoned on a highway, parking lot or other location during a move shall be the sole responsibility of the installer/ transporter and/or the business with which the installer/transporter is employed.

C. All installer/transporters retained by homeowners, retailer/developers or manufacturers shall be subject to the fines as set forth in this Regulation for the improper installation of Factory-Built homes.

Source: *Miss. Code Ann.* §§ 75-49-5; 75-49-11 (Supp. 2013).

Rule 5.02.9-9: Temporary Installer/Transporter License

A temporary license may be issued to persons or companies who are non-residents of this State and who are otherwise licensed transporters or installers in other states. Such temporary license shall remain in force for a period not to exceed thirty (30) days, unless extended for an additional period of sixty (60) days by the Commissioner or until a contract to transport or install entered into during the period of the temporary license has been completed. Within five (5) days of any applicant delivery or beginning work as a transporter or installer under this section, the employer or person contracting with such person shall provide a copy of their installer/transporter license from out-of-state, proof of insurance and surety bond, a list of all employees of the company that will be operating under the temporary license and certify to the Commissioner such application without being deemed in violation of this act.

Source: *Miss. Code Ann.* §§ 75-49-5; 75-49-11 (Supp. 2013).

Rule 5.03: Inspection Procedures

Rule 5.03.1: Authorized Inspections of Manufacturing Plants, Retail Locations, and Installer/Transporter[1]

A. Factory-Built Home Plants located in the State of Mississippi, Factory-Built Home Retail Sales Lots, Developers, and Installer/Transporter business locations and equipment shall be subject to inspection by the State Chief Deputy Fire Marshal, State Deputy Fire Marshals or Duly Authorized Representative as may be required to insure Compliance with *Miss. Code Ann.* § 75-49-11, as amended, all applicable federal statutes and regulations as well as this Regulation.

B. A duly authorized representative of the Factory-Built Home Division of the State Fire Marshal's Office shall periodically inspect each manufacturing location to assist and insure that Factory-Built homes are being constructed in compliance with the National Manufactured Housing Construction and Safety Standards Act of 1974, as amended, (42 U.S.C.S. 5401 et seq.), the Manufactured Housing Improvement Act of 2000 as amended, as well as the governing federal regulations pertaining to Factory-Built housing construction.

C. In the interest of public safety, Deputy State Fire Marshals, who are certified law enforcement officers, are duly authorized to stop and conduct inspections of installer/transporters that are transporting Factory-Built homes to verify compliance with *Miss. Code Ann.* § 75-49-9, 75-49-19 and this Regulation.

D. A duly authorized representative of the Factory-Built Home Division of the State Fire Marshal's Office shall periodically inspect each retailer and developer location to insure that Factory-Built homes offered for sale comply with the National Manufactured Housing Construction and Safety Standards Act of 1974, as Amended, (42 U.S.C.S. 5401, et seq.), and the Manufactured Housing Improvement Act of 2000, pertinent federal regulations, as well as these rules and regulations.

Source: *Miss. Code Ann.* § 75-49-1, *et seq.*; § 75-49-11(Supp. 2013).

Rule 5.03.2: Inspection Findings of Non-Compliance

A. Results of the inspection may be made available to manufacturers, retailers or developers upon request. When serious violations are found on HUD certified units or with the temporary storage of the units, the Factory-Built Home Division of the State Fire Marshal's Office shall immediately attach a non-compliance identification tag to the unit in question.

B. It shall be a violation of these Rules and Regulations for any Factory-Built home to be sold or offered for sale which has a non-compliance identification tag attached. The wording on such tag shall be as follows:

"This unit, having been found to be in NON-COMPLIANCE with the Uniform Standards Code for Factory-Built Homes Law and having been so identified, shall not

be sold or offered for sale in the State of Mississippi. Anyone tampering with or removing this Identification Tag from this unit will be prosecuted as set forth in this Act, and shall be subject to revocation of his license."

C. A non-compliance identification tag attached to a unit may be removed only by the Factory-Built Home Division of the State Fire Marshal's Office. Such tag shall be completed as required thereon.

D. When the State Fire Marshal has reasonable grounds to believe that a unit has been constructed in non-compliance with these standards, he may require, at the manufacturers expense that the walls, floors, decking or other panels be removed for the purpose of inspection.

E. Units having been identified as being in non-compliance with these Rules and Regulations and having a non-compliance tag attached may be transported and relocated only after notice has been given to the Factory-Built Home Division of the State Fire Marshal's Office. Such notice will set forth the purpose for moving such unit, to whom the unit is to be delivered along with complete mailing address and telephone number, serial number, HUD label number and any other information as may be requested.

F. When such violation(s) have been corrected, the unit in question shall be re-inspected by the Factory-Built Home Division of the State Fire Marshal's Office and if found in compliance with the National Manufactured Home Construction and Safety Standards Act, the Manufactured Housing Improvement Act of 2000 and this Regulation, the inspector shall remove the non-compliance identification tag. The unit can then be sold or offered for sale.

Source: *Miss. Code Ann.* § 75-49-1, *et seq.*; § 75-49-11 (Supp. 2013).

Rule 5.03.3: Requirements of Factory-Built Homes for Human Habitation

Rule 5.03.3-1: Anchoring and Blocking

All Factory-Built homes, which include new or used Factory-Built homes, delivered by retailers, developers or independent contractor installers or transporters to any site where such home is to be used for human habitation shall be anchored and blocked in accordance with the Mississippi Factory-Built Home Installation Program as administered by the Factory-Built Home Division of the State Fire Marshal's Office, this Regulation and *Miss. Code Ann.* § 75-49-7.

Source: *Miss. Code Ann.* § 75-49-1, *et seq.*; § 75-49-11 (Supp. 2013).

Rule 5.03.3-2: Installation Inspection

A duly authorized representative of the Factory-Built Home Division of the State Fire Marshal's Office shall periodically inspect site locations where Factory-Built homes, which include new and

used Factory-Built homes, have been delivered and installed by retailers, developers or independent contractor installers or transporters when such home is to be used for human habitation to insure that the home is tied down, anchored and blocked in accordance with the Mississippi Factory-Built Home Installation Program as administered by the Factory-Built Home Division of the State Fire Marshal's Office, ; this Regulation and *Miss. Code Ann.* § 75-49-7.

Source: *Miss. Code Ann.* § 75-49-1, *et seq.*; § 75-49-11 (Supp. 2013).

Rule 5.03.3-3: Skirting of Factory-Built Homes

Factory-Built homes shall not be skirted until a duly authorized representative of the Factory-Built Home Division of the State Fire Marshal's Office has inspected the set-up. An inspection of the home is usually scheduled to occur within three (3) to five (5) business days following the receipt of the Certificate of Inspection Form from the retailer/developer and/or installer/transporter. If, at the time of the installation inspection, the skirting has already been installed, it will be necessary to reschedule the inspection until such time that the skirting can be removed for an unobstructed view of the underside of the home. The person(s) removing the skirting shall contact the State Fire Marshal's Office when the home is ready for the inspection to be conducted.

Source: *Miss. Code Ann.* § 75-49-1, *et seq.*; § 75-49-11 (Supp. 2013).

Rule 5.03.3-4: Factory-Built Homes Designated for Use Other Than Human Habitation.

All Factory-Built homes originally built for human habitation, which an installer/transporter delivers to a home site, shall be required to be installed in compliance with the standards set forth in this regulation, with the exception of any homes properly certified as "not to be used for human habitation." Proper certification that a home will not be used for human habitation must be accomplished by the installer/transporter as follows:

(1) The installer/transporter must obtain an Affidavit of Homeowner, signed and notarized, from the homeowner confirming that the Factory-Built home will not be used for human habitation. The affidavit must be on the form prescribed by the State Fire Marshal's Office.

(2) No later than 72 hours from the time the installation is completed, the installer/transporter must submit to the State Fire Marshal's Office: (a) the completed Affidavit of Homeowner, (b) the Installer Certificate of Inspection form, and (c) the Property Locator/Inspection Report form.

Failure by the installer/transporter to comply with the certification requirements of this regulation shall create a presumption that the Factory-Built home is intended to be used for human habitation.

Source: *Miss. Code Ann.* § 75-49-1, *et seq.*; § 75-49-11 (Supp. 2013).

Rule 5.03.4: Consumer Complaints

A. In cases of complaints of improper installation and set-up of new or used Factory-Built homes lodged against retailers, developers, or installers/transporters, the Factory-Built Home Division of the State Fire Marshal's Office will conduct the necessary inspections and investigations of problems reported during the first twelve (12) months from the date the home is sited at the location intended for human habitation and the date on the installation decal affixed to the Factory-Built home by the inspector to be in full compliance with *Miss. Code Ann.* § 75-49-7(2).

B. A duly authorized representative of the Factory-Built Home Division of the State Fire Marshal's Office when scheduling a site inspection regarding a consumer complaint the manufacturer, retailer, developer, and installer/transporter licensee shall be present for each such inspection. If any manufacturer, retailer, developer, and installer/transporter licensee is unable to attend the site inspection, his duly authorized representative shall be a person employed by the licensee with authority to make decisions regarding corrective action and remedial plans if required.

Source: *Miss. Code Ann.* § 75-49-1, *et seq.*; § 75-49-11 (Supp. 2013).

Rule 5.03.5: Violations and Penalties

When any provision of *Miss. Code Ann.* § 75-49-1 through 75-49-21, as amended, is violated, the State Chief Deputy Fire Marshal, State Deputy Fire Marshals or Duly Authorized Representative may file appropriate action as set forth in *Miss. Code Ann.* § 75-49-19. The penalties include:

A. Any person who knowingly and willfully violates any of the provisions of this chapter or any rules and regulations made hereunder shall be liable to the State of Mississippi for a civil penalty of not more than One Thousand Dollars ($1,000.00) for each such violation. Each violation of a provision of this chapter or a rule or regulation made hereunder shall constitute a separate violation with respect to each Factory-Built home or with respect to each failure or refusal to allow or perform an act required thereby, except that the maximum civil penalty may not exceed One Million Dollars ($1,000,000.00) for any related series of violations occurring within one (1) year from the date of the first violation.

B. An individual, or a director, officer or agent of a corporation, who knowingly and willfully violates any of the provisions of this chapter or any rules and regulations made hereunder in a manner which threatens the health and safety of any purchaser of a Factory-Built home is guilty of a misdemeanor and, upon conviction thereof, shall be fined not more than One Thousand Dollars ($1,000.00) or imprisoned not more than one (1) year, or both.

C. This chapter shall not apply to any person who establishes that he did not have reason to know in the exercise of due care that such Factory-Built home is not in conformity with applicable

Manufactured construction and safety standards, or to any person who, before such first purchase, holds a certificate issued by the manufacturer or importer of such Factory-Built home to the effect that such Factory-Built home conforms to all applicable Manufactured home construction and safety standards, unless such person knows that such Factory-Built home does not so conform.

D. An individual, or director, officer or agent of a corporation, who knowingly and willfully fails to obtain the applicable license under this chapter and who is required to obtain such a license under this chapter, and who may knowingly and willfully violate any provisions of this chapter or any rules and regulations made hereafter with respect to the manufacture, selling, distribution, or safe anchoring and blocking of a Factory-Built home when intended to be used for human habitation is guilty of a misdemeanor and, upon conviction thereof, shall be fined not more than One Thousand Dollars ($1,000.00) or imprisoned not more than one (1) year, or both.

E. An administrative review of all privilege licenses issued pursuant to *Miss. Code Ann.* § 75-49-9(7), shall be conducted upon receipt of any verifiable complaint(s) of any nature that exceeds sixty (60) days in length without resolution, which may lead to a possible licensure hearing (hereafter known as the Dispute Resolution Program) pursuant to *Miss. Code Ann.* § 75-49-13, as amended. The sixty (60) day period shall not serve as a mandatory waiting period, and in the appropriate case the Commissioner may, at his discretion, schedule a licensure hearing prior to the expiration of sixty (60) days. The procedures set forth in *Miss. Code Ann.* § 75-49-13 for hearings and appeals shall govern the Dispute Resolution Program.

F. The Dispute Resolution Program shall also address the following:

1. The timely resolution of disputes among manufacturers, retailers, or installers regarding responsibility for correction and repair of defects in Factory-Built homes;

2. The issuance of appropriate orders for correction and repair of defects in such homes, and;

3. Any dispute regarding defects in the Factory-Built home that are reported within one (1) year after the date of first installation.

G. Nothing in this Regulation shall prohibit informal disposition by settlement or consent order, i.e., an order based upon an agreement in writing between the parties in lieu of an administrative hearing.

H. If the administrative hearing order calls for the revocation, suspension, and/or voluntary surrender of a privilege license for any manufacturer, retailer/developer, or installer/transporter, a mandatory two (2) year waiting period will be imposed before any application for re-licensure may be submitted for review. In addition, all monetary obligations (outstanding invoices and fines) to the State, at the time of the loss of the privilege license, must be paid prior to the submittal of the license application. A formal administrative hearing may be held with the license applicant to review the status of all monetary obligations. If the license is to be issued to the

applicant, all the requirements in Rule 5.02.9-2, Rule 5.02.9-3, and Rule 5.02.9-8 shall apply.

Source: *Miss. Code Ann.* § 75-49-1, *et seq.*; §§ 75-49-11, 75-49-13, 75-49-19 (Supp. 2013).

Rule 5.04: Minimum Standards for Blocking, Anchors, And Tie Downs

Rule 5.04.1: Standards for "Coded" Areas

Any local government (county or municipality) which has adopted the latest edition and Appendices of the International Building Code published by the International Code Council (ICC) or the International Residential Code for One and Two-Family Dwellings as published by the ICC or the board of supervisors of any county who has adopted *Miss. Code Ann.* § 75-49-21, will be regarded by the Factory-Built Home Division of the State Fire Marshal's Office as being in full compliance with these Rules and Regulations of the "Uniform Standards Code for Factory-Built Homes Law" and as such will assume responsibility as LAHJ for local code enforcement for the installation, blocking, anchoring and tie-downs, and inspection procedures to ensure compliance with the National Manufactured Home Construction and Safety Standards Act, of Factory-Built homes, which are defined as Factory-Built homes within their respected jurisdictions. Additionally, homes that are installed and set-up in accordance with federal guidelines required to meet the financing criteria of a federal agency are regarded by the Factory-Built Home Division of the State Fire Marshal's Office as being in full compliance. However, the Factory-Built Home Division of the State Fire Marshal's Office is the State Administrative Agency for the Department of Housing and Urban Development only.

Source: *Miss. Code Ann.* § 75-49-1, *et seq.*; § 75-49-11(Supp. 2013).

Rule 5.04.2: Standards for "Non-Coded" Areas

Minimum standards for blocking, anchors and tie-downs for Factory-Built homes in non-coded areas of the state, when delivered to a home site location in the State of Mississippi, where they are intended to be used for human habitation shall be installed in accordance with the Mississippi Factory-Built Home Installation Program, these regulations, and any and all applicable state and federal laws, rules and regulations, so as to prevent loss of life and property from wind storms and related hazards. A period of thirty (30) days from the date of delivery is allowed for blocking and anchoring of the home.

If the licensure exceptions do not apply (as listed in Rule 5.02.5), no Factory-Built home shall be installed within this state unless such installation is done by an installer/transporter licensed by the Mississippi Department of Insurance State Fire Marshal's office in accordance with the manufacturer's approved installation plan or the minimum standards set forth in this Regulation.

The licensed installer/transporter or an employee of the licensed installer/transporter who possesses a current certificate of training from the State Fire Marshal's Office must be present during the entire installation process. The owner or purchaser of a Factory-Built home is not allowed to transport said home unless the owner or purchaser is a licensed installer/transporter.

If the manufacturer's installation manual is unavailable for the installation, then the home must be installed according to the minimum standards set forth in this regulation.

Source: *Miss. Code Ann.* § 75-49-1, *et seq.*; § 75-49-11 (Supp. 2013).

Rule 5.04.3: Windstorm Protection and Wind Zone Designation

A. All new and used Factory-Built homes shall be installed in compliance with the set-up/installation instructions manual, in accordance with Federal Manufactured Home Construction and Safety Standards, 24 CFR Section 3280.306, Windstorm protection support and anchoring systems as follows: (a) Provisions for support and anchoring systems. Each Factory-Built home shall have provisions for support/anchoring or foundation systems that, when properly designed and installed, will resist overturning and lateral movement (sliding) of the Factory-Built home as imposed by the respective design loads. For Wind Zone I, the design wind loads to be used for calculating resistance to overturning and lateral movement shall be the simultaneous application of the wind loads indicated in Section 3280.305 (c)(1)(i), increased by a factor of 1.5 [D 7 76]. The 1.5 factor of safety for Wind Zone I is also applied simultaneously to both the vertical building projection, as horizontal wind load, and across the surface of the full roof structure, as uplift loading. For Wind Zones II and III, the resistance shall be determined by the simultaneous application of the horizontal drag and uplift wind loads, in accordance with Section 3280.305 (c)(1)(ii). The basic allowable stresses of materials required to resist overturning and lateral movement shall not be increased in the design and proportioning of these members. No additional shape or location factors need to be applied in the design of the tie down system. The dead load of the structure may be used to resist these wind loading effects in all Wind Zones.

B. Used Factory-Built homes, as defined in this chapter, not provided with such set-up/installation instruction manuals, and not provided with instructions shall comply with the specifications listed under Rule 5.06, Mississippi Factory-Built Home Installation Program Standards, infra.

C. Factory-Built homes, both new and used, built after July 13, 1994 that conform to Wind Zone I ratings only, cannot be installed within a designated Wind Zone II area, unless approved by the Local Authority Having Jurisdiction (LAHJ) within the Wind Zone II area. The wind Zone II area for homes Factory-Built after July 13, 1994 consist of the following counties: Hancock, Harrison, Jackson, George, Pearl River and Stone.

D. For used Factory-Built homes that were built prior to July 13, 1994, the following shall apply: If the Factory-Built home was built to the HUD Hurricane Zone rating that existed prior to July 13, 1994, it may be installed in one of the post July 13, 1994, counties that are listed in (C) above. For reference, HUD designated Hurricane Zone counties that existed prior to July 13, 1994, were as follows: Hancock, Harrison, Jackson, George, Pear River, Stone, Greene, Perry, Forrest, Lamar, Marion, Walthall, Pike, Amite, and Wilkinson. However, if the LAHJ within the post-July 13, 1994, Wind Zone II area has adopted more restrictive requirements that would prohibit the installation of a pre-July 13, 1994, Hurricane Zone house, then the requirements of such county or municipality shall govern.

E. The retailer, developer, and installer/transporter are responsible for ensuring that the Factory-Built home is not located in a Wind Zone area that exceeds the design limitations for which the unit was constructed.

Source: *Miss. Code Ann.* § 75-49-1, *et seq.*; § 75-49-11 (Supp. 2013).

Rule 5.04.4: Data Plate and HUD Label Requirements

Rule 5.04.4-1: HUD Label[1]

Each section of each Factory-Built home under the Federal Manufactured Home Construction and Safety Standards (FMHCSS) shall contain a HUD label issued by the inspection agency. The label indicates that the home meets the applicable standards and that the construction process has been monitored by a third-party inspection agency.

Source: *Miss. Code Ann.* §§ 75-49-1, et seq.; 75-49-11 (Supp. 2013).

Rule 5.04.4-2: Data Plate

Each Factory-Built home is also required to bear a data plate affixed in a permanent manner near the electrical panel or other readily accessible and visible location. The data plate shall contain information, including the name of the manufacturer, design-approval agency, factory installed equipment, and the wind zone classification, roof load, and thermal zones for which the unit was constructed.

Source: *Miss. Code Ann.* § 75-49-1, *et seq.*; § 75-49-11 (Supp. 2013).

Rule 5.04.4-3: Missing HUD Label and Data Plate

No Factory-Built home constructed on or after June 15, 1976, may be installed within the State

of Mississippi unless it contains the HUD label and a data plate (see paragraphs (5.04.4-1) and (5.04.4-2) above) or unless verification certificates of the HUD label or HUD data plate compliance certificates for the home have been obtained from The Institute for Building and Technology Safety (IBTS).

Source: *Miss. Code Ann.* § 75-49-1, *et seq.*; § 75-49-11 (Supp. 2013).

Rule 5.04.4-4: Factory-Built Homes That Shall Not Be Transported[1]

The following Factory-Built homes when intended for human habitation, which are presumptively not in compliance with the requirements described in Miss. Code § 75-49-5(3), shall not be transported into or within Mississippi unless the installer/transporter has obtained a letter of exception from the State Fire Marshal's Office:

1. Any Factory-Built home manufactured before June 15, 1976.

2. Any pre-HUD Factory-Built home.

3. Any Factory-Built housing unit without a valid HUD label indicating federal construction and safety standards were met during construction unless the home was a trade in to a retailer licensed with the State Fire Marshal's Factory-Built Home Division.

4. Any Factory-Built home that has been structurally compromised from the manufacturer's design approval plan.

5. Any Factory-Built home that has been declared salvage after damage by flood, wind, and/or fire.

6. Any Factory-Built home that has been denied siting in another State for reasons other than the federal zone requirements for wind, thermal, and/or roof load protection.

Source: *Miss. Code Ann.* § 75-49-1, *et seq.*; § 75-49-11 (Supp. 2013).

Rule 5.04.4-5: Preparation of Manufactured Housing Units for Transportation

A. Transportation Originating Outside Of Mississippi: Preparation of the new manufactured housing unit for transport where transportation originates outside of Mississippi shall be in accordance with the laws and applicable rules for the State of origin.

B. Transportation Originating Within Mississippi: Only licensed manufacturers, licensed retailers, and licensed installer/transporters may prepare a manufactured housing unit located in Mississippi for transport.

(a) Only licensed manufacturers, licensed retailers and factory-certified installer/transporters may prepare a new manufactured housing unit located in Mississippi for transport.

(b) All used manufactured housing units that have been occupied and where a licensed manufacturer and/or a licensed retailer is **not** involved, the following tasks must be completed by the licensed installer/transporters:

1. Anchoring systems and devices must be carefully removed in the reverse order from which they were installed;
2. Ridge Caps must be removed from multi-section homes;
3. Multi-section homes must be carefully separated following the reverse procedure used to connect homes or buildings together;
4. The furnishings and contents must be either secured or removed;
5. Plumbing, electrical, heat producing equipment and air conditioning must be properly disconnected by licensed/certified contractors who are otherwise regulated by State law;
6. Wheels and axles must be properly installed to the frame of the home;
7. All piers must be removed from under the home;
8. The bottom board must be secured for movement;
9. The unit must be secured to protect the inside of the home from moisture and wind damage.

Source: *Miss. Code Ann.* § 75-49-1, *et seq.*; § 75-49-11 (Supp. 2013).

Rule 5.05: Installation Standards For New Factory-Built Homes

The Mississippi Factory-Built Home Installation Inspection Program ("Installation Program") is established to set forth the requirements by which manufacturers, retailers, developers, installer/transporters, and installation inspectors will be held accountable for assuring the appropriate installation of new Factory-Built homes within the State of Mississippi meet the intent of the manufacturer's installation requirements. The Mississippi Factory-Built Home Installation Program Standards ("Installation Standards") are the standards and requirements as set forth by the Federal Manufactured Housing Construction and Safety Standards Act of 1974, as amended (42 USCS 5401 et seq.) and as amended by the Manufactured Housing Improvement Act of 2000, and as same may be revised and amended.

Source: *Miss. Code Ann.* § 75-49-1, *et seq.*; § 75-49-11 (Supp. 2013).

Rule 5.06: Installation Standards For Used Factory-Built Homes

The Mississippi Factory-Built Home Installation Inspection Program ("Installation Program") is

established and sets forth the requirements by which manufacturers, retailers, developers, installer/transporters, and installation inspectors will be held accountable for assuring the appropriate installation of used Factory-Built homes within the State of Mississippi.

Source: *Miss. Code Ann.* § 75-49-1, *et seq.*; § 75-49-11 (Supp. 2013).

Rule 5.06.1: Site Preparation

Rule 5.06.1-1: Planning

Before attempting to move a home, the installer/transporter shall ensure that the transportation equipment and home can be routed to the installation site. Special transportation permits that may be required from federal, state, county, or city officials shall be the responsibility of the installer/transporter.

Source: *Miss. Code Ann.* §§ 75-49-1, et seq.; 75-49-11 (Supp. 2013).

Rule 5.06.1-2: Soil Conditions[1]

To help prevent settling or sagging, the foundation must be constructed on firm, undisturbed soil or fill compacted to at least 90 percent of its maximum relative density. Loose sands, gravel or other materials having an allowable soil bearing pressure less than 2000 pounds per square foot (psf) are not to be used as the fill material. All organic material such as grass, roots, twigs, and wood scraps must be removed in areas where footings are to be placed.

Source: *Miss. Code Ann.* §§ 75-49-1, et seq.; 75-49-11 (Supp. 2013).

Rule 5.06.1-3: Site Grading and Drainage

A. The Factory-Built home shall be placed on a properly prepared site. After removal of all organic material, the home site must be graded or otherwise prepared to ensure adequate drainage. Site drainage will be a shared responsibility of the retailer, developer and installer/transporter of Factory-Built homes sold by the retailer except when the site is located in a mobile home park, as contemplated by Mississippi Code Ann., Section 75-49-5, and applicable HUD Regulations. Each site where a home is to be installed shall have a properly crowned and finished grade that will provide for drainage of all water around and away from the home site (see Figure 1).

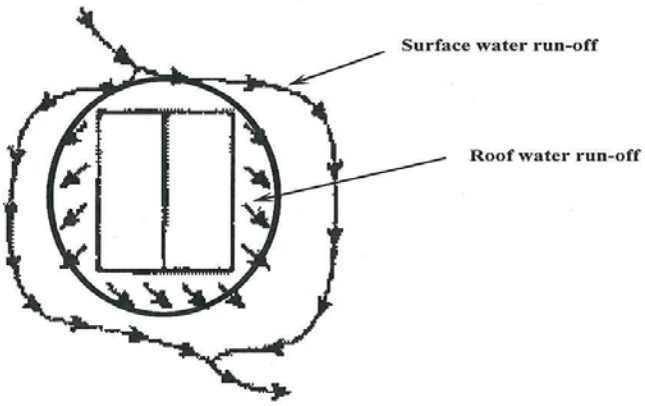

Figure 1. Water drainage must be diverted around and away from the home.

B. The site shall be properly crowned and sloped so that water will not stand under the home or run under the home (see Figure 2).

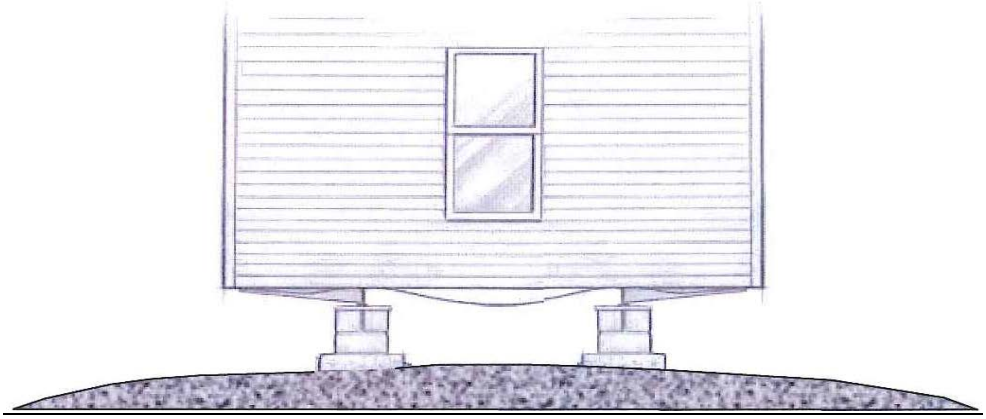

Figure 2. The appearance of a properly crowned soil under the home.

Source: *Miss. Code Ann.* §§ 75-49-1, et seq.; 75-49-11 (Supp. 2013).

Rule 5.06.1-4: Raised Soil Pad

If the installation site is flat or is in a low area, the soil must be brought to the site to create the proper grading under the home. The fill material for the pad of soil must be placed on each home installation site such that the dimensions of the pad will extend up to 10 ft beyond all four (4)

sides of the home. The soil pad fill material must be compacted to 90 percent of maximum relative density to provide the proper load bearing capacity for the support pier footings. Loose sands, gravel or other non-compactable materials are not to be used as the fill material for the pad. The soil under the home shall be compacted and adequately crowned and sloped from the centerline of the home and provide a minimum slope of ½ inch per foot out and away from each side of the home (see Figure 3). All depressions in the soil pad resulting from the use of the transportation equipment moving the home onto the installation site shall be properly filled and graded by the installer/transporter before departing the installation site.

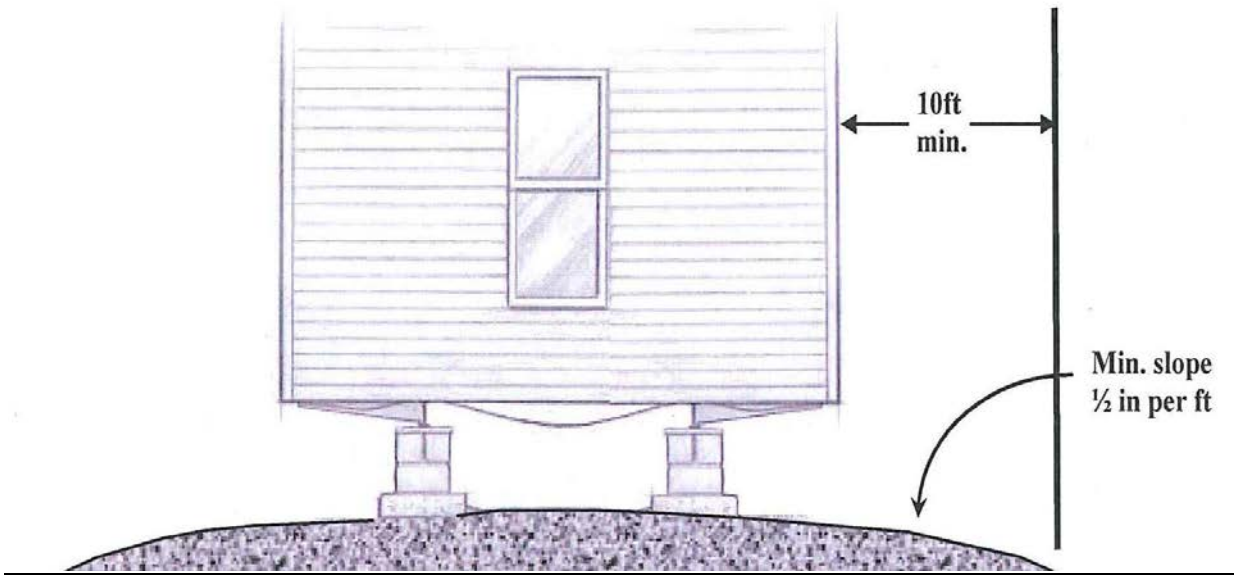

Figure 3. Slope of pad and distance of slope beyond edges of home.

Source: *Miss. Code Ann.* §§ 75-49-1, et seq.; 75-49-11 (Supp. 2013).

Rule 5.06.1-5: Determination of Proper Site Preparation

A. Before installing the Factory-Built home, the installer/transporter has the responsibility to determine that the site preparation meets the requirements set forth in either the manufacturer's installation manual for all new Factory-Built homes or as set forth in this Regulation for all secondary sitings of used Factory-Built homes. If the LAHJ has more stringent regulations for homes installed in local mobile home parks, those regulations shall take precedence.

B. If the retailer or developer sells the Factory-Built home and retains the installer/transporter, the responsibility to ensure that site preparation is done properly shall be a shared responsibility of both the retailer, the developer, and the installer/transporter.
Source: *Miss. Code Ann.* §§ 75-49-1, et seq.; 75-49-11 (Supp. 2013).

Rule 5.06.1-6: Written Contract on Site Preparation[1]

A written contractual agreement between the landowner and/or homeowner, the retailer, the developer and/or installer/transporter may be used to determine which party is to perform the site preparation. The installation of Factory-Built homes shall not be performed on improperly prepared home sites.

Source: *Miss. Code Ann.* §§ 75-49-1, et seq.; 75-49-11 (Supp. 2013).

Rule 5.06.1-7: Site Preparation by Landowner and/or Homeowner

In the event that site preparation work is requested to be done by the landowner and/or homeowner, the retailer, developer or the installer/transporter, may agree to this, but, the agreement must be made in writing. However, the existence of said contractual agreement shall not relieve the installer/transporter of the responsibility of determining that the site for the home has been properly prepared. Before the installer/transporter may begin the installation of the Factory-Built home, the installer/transporter shall determine that the site preparation meets the requirements set forth in either the manufacturer's installation manual for all new Factory-Built homes or as set forth in this Regulation for all used Factory-Built homes. If there is conflict between the retailer, developer, installer/transporter and the landowner and/or homeowner regarding the site preparation, the State Fire Marshal's Office may be required to mediate. Any fee charged by the State Fire Marshal's Office due to said mediation will be paid by the landowner and/or homeowner.

Source: *Miss. Code Ann.* §§ 75-49-1, et seq.; 75-49-11 (Supp. 2013).

Rule 5.06.1-8: Removal of Organic Material

All organic material, such as grass, roots, twigs, and wood scraps, shall be removed from beneath the site where the home will be placed and will include where the footings and the piers of the home are to be installed. The purpose of this is to minimize settling and reduce the potential for any insect damage.

Source: *Miss. Code Ann.* §§ 75-49-1, et seq.; 75-49-11 (Supp. 2013).

Rule 5.06.1-9: Clearance Under the Home

The site should be properly graded such that a minimum clearance of 12 inches shall be maintained beneath the lowest member of the main frame (I beam or channel beam) and the soil under the home. No more than 25 % of the underside of the main frames of the home shall be at the minimum clearance of 12 inches above the existing grade.

Source: *Miss. Code Ann.* §§ 75-49-1, et seq.; 75-49-11 (Supp. 2013).

Rule 5.06.1-10: Sloped Site Installation

Where the site slopes toward the foundation (piers) of the home, it is important to provide wide, shallow, drainage swales on the uphill side of the home for diversion of water around and away from the underside of the home.

Source: *Miss. Code Ann.* §§ 75-49-1, et seq.; 75-49-11 (Supp. 2013).

Rule 5.06.1-11: Ventilation of Under-floor Areas and Moisture Barrier

A. Provisions shall be made to minimize condensation in under-floor areas through ventilation openings or other suitable means. A 6 mil polyethylene sheeting or equivalent must be placed on the ground area in the crawlspace below the home. A minimum of 90 percent of the ground area must be covered, not to include the areas under the footer.

B. A minimum of four ventilation openings totaling no less than 4 square feet of net free vent area must be provided. One shall be placed at or near each corner as high as practicable. If manufacturer's installation instructions are available and require more vents, the manufacturer's instructions shall apply.

C. Vent openings shall provide cross ventilation on at least two opposite sides. The openings shall be covered with corrosion resistant mesh or as part of the vinyl skirting material.

D. Moisture producing devices, such as dryers, shall be vented to the atmosphere in such a manner to insure that moisture laden air is carried beyond the perimeter of the home.

E. Ventilation and moisture barrier requirements for all new Factory-Built homes shall be provided according to the manufacturer's installation manual.

Source: *Miss. Code Ann.* §§ 75-49-1, et seq.; 75-49-11 (Supp. 2013).

Rule 5.06.2: Fire Separation

Separation from adjacent structures and lot lines is based on the fire resistance rating of the home pursuant to **NFPA 501A Standard for Fire Safety Criteria for Factory-Built Home Installations, Sites and Communities**, Section 4 2.1, entitled "Fire Safety Separation Requirements," Sub section 4.2.1.1 as follows:

Any portion of a Factory-Built home, excluding the tongue, shall not be located closer than 10 ft. side to side, 8 ft. end to side, or 6 ft. end to end horizontally from any other Factory-Built home or community building unless the exposed composite walls and roof of either structure are without openings and constructed of materials that will provide a one hour fire rating or the

structures are separated by a one hour fire rated barrier." Most Factory-Built homes may be classified as "non-rated" construction. However, manufacturers may, in some instances, construct one hour rated walls. Information regarding the fire rating of the unit may be obtained from the manufacturer or third party inspection agency identified on the data plate.

Source: *Miss. Code Ann.* §§ 75-49-1, et seq.; 75-49-11 (Supp. 2013).

Rule 5.06.3: Sites Prone to Flooding[1]

A. Prior to the installation of the Factory-Built home, the installer/transporter is responsible for determining if the home site is wholly or partially within a flood prone area. If the home is located within a flood prone area, the installer/transporter is also responsible for contacting the homeowner to determine if they have obtained the proper flood elevation permit/certificate for the property from the county floodplain coordinator. All new Factory-Built homes that are to be located in a flood prone area shall require the manufacturer's approval of the location of the home. If the location is approved by the manufacturer then the installation shall require that:

1. the home be set a minimum distance above the base flood elevation as determined by the LAHJ,
2. meet all the requirements set forth in the Federal Emergency Management Agency (FEMA) September 1985 publication, Factory-Built Home Installation in Flood Hazard Areas, and
3. shall have an engineer-designed foundation system installed.

B. All used Factory-Built homes that are installed within a flood prone area shall be required to:
1. be set a minimum height above the base flood elevation,
2. meet all the installation standards set forth in this Regulation,
3. meet all the installation standards set forth in the FEMA 1985 publication, and
4. shall be required to have an engineer- designed foundation system.

C. For all homes placed in sites that have a potential for flooding, special elevations and anchoring techniques are required. Consult an engineer and the LAHJ (local building official, etc.) to make sure that the design and construction of the foundation system of the home conform to applicable federal, state, and local codes and regulations. Source: *Miss. Code Ann.* §§ 75-49-1, et seq.; 75-49-11 (Supp. 2013).

Rule 5.06.4: Soil Classification[1]

The following soil classifications in Table I have been adopted for the purpose of determining design loads, specifications and holding power of anchors and tie-down devices.

Table I Soil Classification

Soil Class	Types of Soils	Blow Count (ASTM)	Test Probe (1) Torque Value (2)
I	Sound hard rock; Very dense and/or cemented ….	N/A	N/A
II	Sands, coarse gravel and cobles, preloaded silts, clays and corals…	40 and up	More than 550 lbs.-in.
III	Medium-dense coarse, sands, sandy gravel, very stiff silts and clays….	24-39	350-549 lbs.- in.
IV(4)	Loose to medium dense sands, firm to stiff clays and silts, alluvian fill…..	(3) 14-23	(3) 200-349 lbs. – in.
V	Peat, organic silt, inundated silts, loose fine sand, alluvium, loess, varied clays, fill, fly ash….	0-14	0-200 lbs. – in.

1. The test probe is a device for measuring the torque of soils to assist in evaluating the holding capacity of the soils in which the anchor is placed. The test probe has a helix on it. The overall length of the helical section is 10.75 inches; the major diameter is 1.25 inches, the minor diameter is 0.81 inches; the pitch is 1.75 inches. The shaft must be of suitable length for anchor depth.

2. A measure synonymous with the moment of a force when distributed around the shaft of the test probe.

3. Below these values a registered professional engineer must be consulted.

4. A C-4 anchor must be used unless the soil is tested with a soil test probe and the readings allow for another soil type anchor to be used.

Source: *Miss. Code Ann.* §§ 75-49-1, et seq.; 75-49-11 (Supp. 2013).

Rule 5.06.5: Soil Type/Bearing Capacity

Under the Federal Standards, manufacturers are only required to provide one acceptable method for installing the home. However, manufacturers usually provide installation instructions that can be applied to a number of sites. These "generic" instructions commonly specify a minimum acceptable bearing capacity of the soil. Additionally, the manufacturer may offer options for

acceptable footing sizes based on the bearing capacity of the soil. Installer/transporters and inspection personnel should first determine the bearing capacity of the soil in order to determine the proper size footing or foundation. Different soil types will have different bearing and holding capacities. The bearing capacity of the soil is the load per unit area that can be supported safely by the ground. The performance of the ground anchor is also related to the soil's holding capacity. In the absence of borings, test pits, and other soil investigations that provide information on the proposed site, the following description of soil types in Table II may be used for homes installed in Mississippi.

TABLE II – BEARING CAPACITY/SOIL TYPE*

Bearing Capacity, psf	Bearing Capacity kg/m2	Soil Type
2000	9765	Loose sand clay soils or medium soft clay
3000	14647	Firm or stiff clay
4000	19530	Loose fine sand or compact inorganic silt soils
6000	29295	Compact sand clay soils
8000	39059	Loose coarse to medium compact fine sand

*Note: The above table may be used if the soil characteristics are known. If the soil type is unknown, the following resources may be consulted to determine the soil type/bearing capacity:
(a) LAHJ;
(b) Soil conservation district;
(c) United Sates Geological Survey;
(d) The Resource Conservation Agency of the U. S. Department of Agriculture;
(e) Highway Department;
(f) Qualified Professional Engineer; and/or
(g) Other methods approved by the Commissioner.

In lieu of determining the soil bearing capacity by the use of the methods described above, an allowable bearing capacity of 2000 psf may be used unless the site-specific information requires the use of lower values based on soil classification and soil type.

Source: *Miss. Code Ann.* §§ 75-49-1, et seq.; 75-49-11 (Supp. 2013).

Rule 5.06.6: Required Piers and Anchorages[1]

A. All used Factory-Built homes require diagonal ties to restrict the unit from being pushed from the main support piers. These diagonal ties also restrict overturning of the structure. Additional over the top tie downs or vertical side wall tie downs to restrict overturning are

required by some Factory-Built home installations. When a used Factory-Built home is relocated (secondary sitings) **all** of the original diagonal and over-the-top (vertical) tie downs must be reinstalled.

B. Piers or load-bearing supports or devices shall be designed and constructed to evenly distribute the loads. The maximum pier loads are listed in Table III and Table IV. Piers shall be securely attached to the frame of the Factory-Built home or shall extend at least six (6) inches from the centerline of the frame member. Factory-Built load-bearing supports or devices shall be listed or approved for the use intended.

TABLE III – MAXIMUM PIER LOAD IN POUNDS

Number of Concrete Blocks	**Soil Bearing Value**	**Maximum Allowable Load**
1	1,000 lbs./square foot	4,800 lbs.
2	2,000 lbs./square foot & greater	9,600 lbs.

* ABS Pad types include the following:

13 ¼” x 26 ¼” Pad	2.395 square feet	ID#4148 4 or
20” x 20” Pad	2.777 square feet	ID#1055 7

TABLE IV - MAXIMUM PIER LOAD

Type	**Pad Configuration**	**Pad Area (in square inches)**	**Soil Bearing Capacity PSF (in pounds)**					
			1000	**1500**	**2000**	**2500**	**3000**	**Remarks**
1	1-16 x 16 w/1 or w/2 CMUs	256	780	670	560	450	340	Max: 5340 #
2	1-18.5 x 18.5 w/1 CMU	342	375	563	750	598	598	Max: 5600 #
3	1-18.5 x 18.5 w/2 CMUs	342	375	563	750	938	125	Max: 7125 #
4	2-13.13 x 26.13 w/1 CMU	342	375	563	750	938	400	Max: 6400 #
5	1-18.5 x 18.5 w/1 CMU	342	375	563	750	938	125	Max: 7125 #
6	1-20 x 20 w/1 CMU	400	775	167	556	600	600	Max: 5600 #
7	1-20 x 20 w/2 CMUs	400	775	167	556	944	333	Max: 8333 #

All pad sizes shown are nominal dimensions and may vary up to 1/8 inch.

C. Pier foundations shall be installed directly under the main frame of the Factory-Built home. The piers shall not be further apart than six (6) feet on center when using a minimum pier foundation of a 16”x16”x4” concrete pad or equivalent in the minimum soil bearing capacity of 2000 psf. Piers shall be placed no more than two (2) feet and no less than one (1) foot from the end of the frame.

Source: *Miss. Code Ann.* §§ 75-49-1, et seq.; 75-49-11 (Supp. 2013).

Rule 5.06.7: Pier Construction

Rule 5.06.7-1: Single Stacked Piers

Except for corner piers, support piers less than 36 inches high, shall be constructed of single stacked masonry units, placed with the open cells in the vertical position when placed upon the pier footing. The frame piers must be installed so that the long sides are at right angles to the supported I-beam. (See Figure 4).

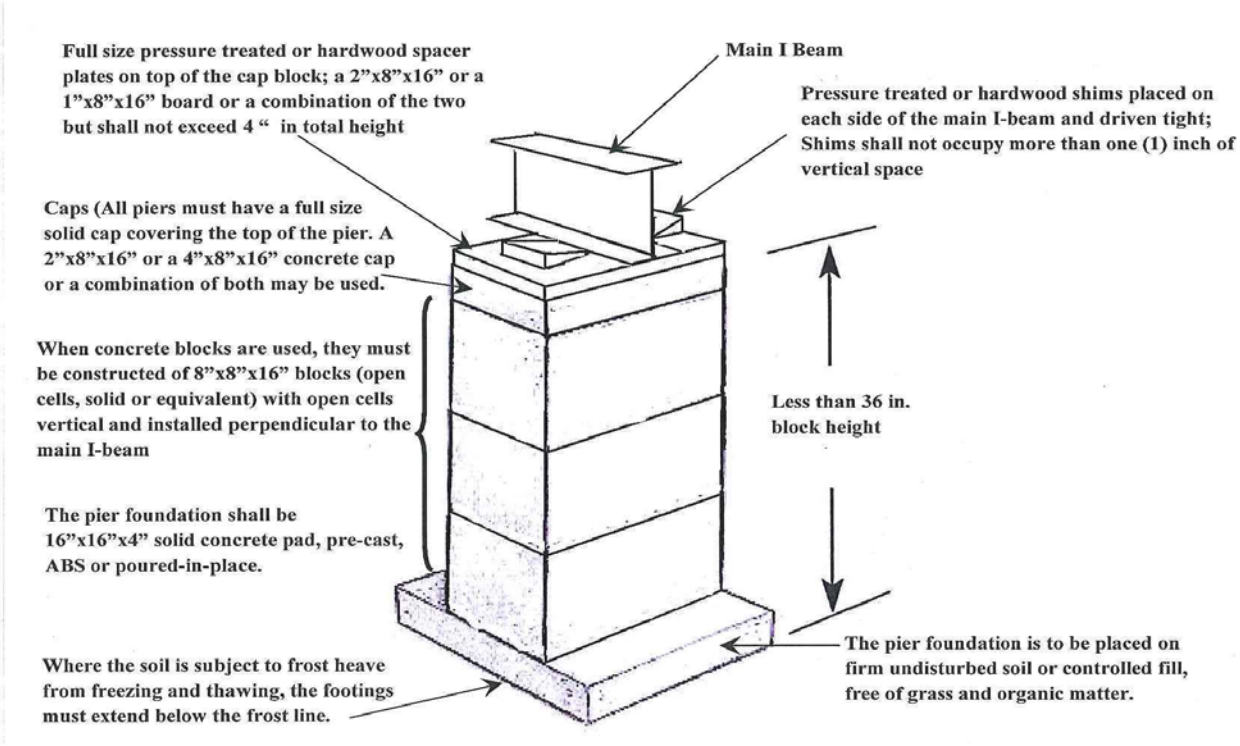

Figure 4. Single block pier construction.

Source: *Miss. Code Ann.* §§ 75-49-1, et seq.; 75-49-11 (Supp. 2013).

Rule 5.06.7-2: Pier Caps

All single stacked piers must have a full size cap covering the top of the pier. A 2”x8”x16” or a 4”x8”x16” concrete cap or a combination of both may be used. A full size pressure treated wood or hardwood spacer shall be placed on top of the cap. A 2 x 8x16 inch treated or hardwood plate or a 1x8x16 inch treated or hardwood plate or a combination of both shall be placed on top of the pier cap. Additional full size plates not less than 1 x 8 x 16 inch may be used but the additional plates shall not exceed 4 inches in total height.

Source: *Miss. Code Ann.* §§ 75-49-1, et seq.; 75-49-11 (Supp. 2013).

Rule 5.06.7-3: Shims

A. The frame may be cushioned with treated wood or hardwood or other approved shims (wedges). The shims (wedges) shall be used in pairs, installed in opposite directions and be fitted and driven tightly between the pressure-treated wood plate and main frame of the home.

B. One shim at least 4”x6” nominal shall be placed on each side of the main frame on single tiered piers.

C. Two shims shall be placed on each side of the main frame on double tiered piers.

D. Shims shall not occupy more than 1 inch of vertical space between the top plate and the main frame.

E. Shims shall be used in pairs and driven tight.

Source: *Miss. Code Ann.* §§ 75-49-1, et seq.; 75-49-11 (Supp. 2013).

Rule 5.06.7-4: Removal of Organic Material

All grass, grass sod, debris and other organic material shall be removed before footings or pier foundations are installed. The minimum main frame support pier foundation shall be a 16 inch x 16 inch x 4 inch solid concrete pad, pre-cast, poured-in-place, or ABS pads.

Source: *Miss. Code Ann.* §§ 75-49-1, et seq.; 75-49-11 (Supp. 2013).

Rule 5.06.7-5: Protection From Frost Heave

Where the soil is subject to frost heave from freezing and thawing, the footings for support piers must extend below the frost line (no less than two (2) inches from the top of the ground).

Source: *Miss. Code Ann.* §§ 75-49-1, et seq.; 75-49-11 (Supp. 2013).

Rule 5.06.7-6: Corner Piers

All corner piers shall be double tiered units at least 16” x 16” consisting of interlocking masonry units and shall be fully capped as shown in Figure 4. Two 8x16x4 inch cap blocks may be used on a double tiered pier provided that the joint between the blocks is perpendicular to the joint between the open cell concrete blocks and is also perpendicular to the main frame I-beam. The corner piers shall be placed not more than 2 ft. and not less than 1 ft. from the end of each main frame support beam.

Source: *Miss. Code Ann.* §§ 75-49-1, et seq.; 75-49-11 (Supp. 2013).

Rule 5.06.7-7: Double Tiered Pier Heights[1]

A. Piers 36 inches to 67 inches high shall be double-tiered units at least 16x16 inches consisting of interlocking masonry units and shall be fully capped with a 2 inch or 4 inch thick solid masonry unit or equivalent. (See Figure 5).

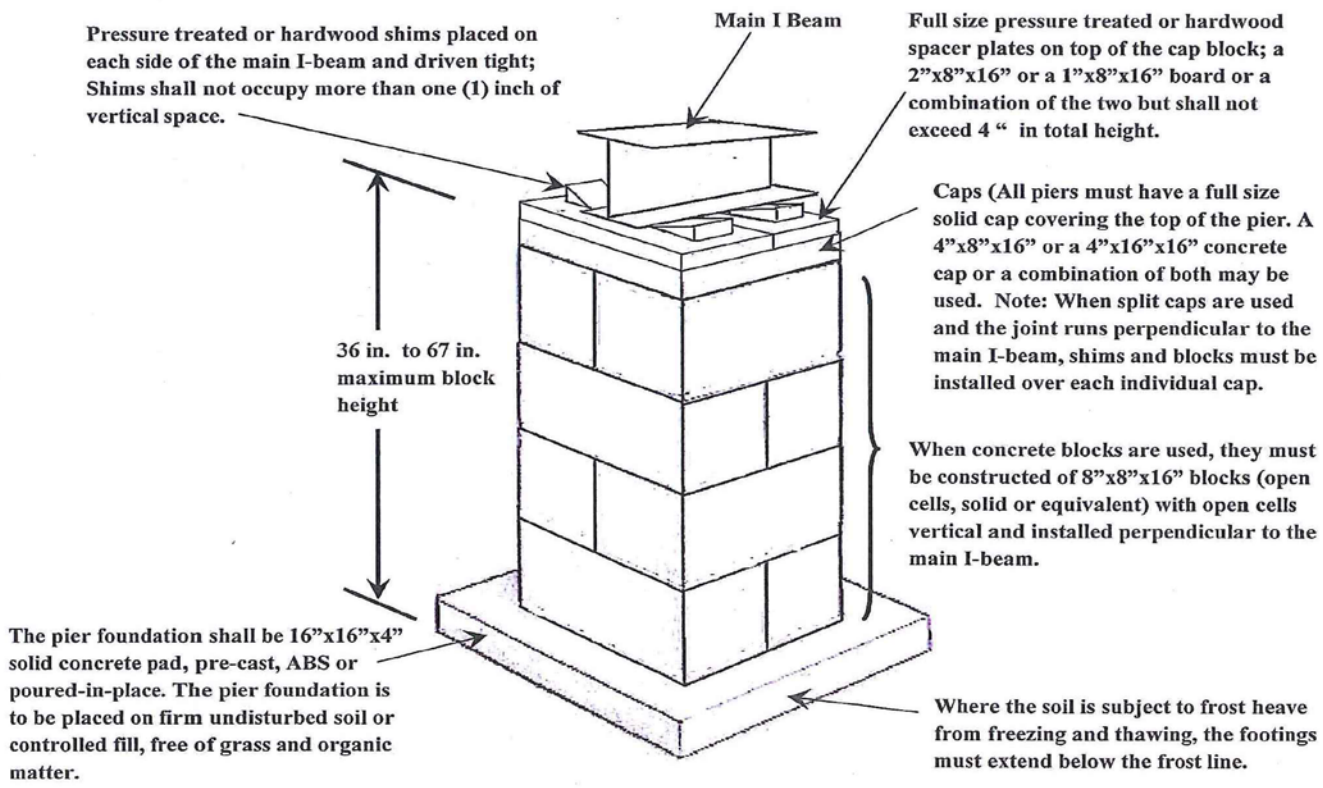

Figure 5. Double Block Pier Construction.

B. Piers between 68-80 inches high shall be constructed in accordance with the provisions of Rule 5.06.7-7(A), provided the piers shall be filled with grout and reinforced with four (4) continuous No. 5 bars. One bar shall be placed in each corner of the grouted space of the piers.

C. The maximum pier height shall be no more than 80 inches unless designed and approved by a registered engineer or a higher height/different design is required by the National Flood Insurance Program (NFIP) floodplain management criteria.

Source: *Miss. Code Ann.* §§ 75-49-1, et seq.; 75-49-11 (Supp. 2013).

Rule 5.06.7-8: Cast-In-Place Concrete Piers

Cast-in-place concrete piers meeting the same size and height limitations of Rule 5.06.7-1 through 5.06.7-7 above, may be substituted for piers constructed of masonry units.

Source: *Miss. Code Ann.* §§ 75-49-1, et seq.; 75-49-11 (Supp. 2013).

Rule 5.06.7-9: Pier Footings

A. Every pier shall be supported by a footing. All main frame support piers and marriage line support piers shall be constructed on footings of solid concrete not less than 16 x 16 inches that consist of a concrete pad, precast, ABS, or poured in place concrete slab, unless other footing types and sizes are allowed. All footings are to be placed on stable undisturbed soil or properly compacted fill material. The fill material must be compacted to 90 percent of maximum relative density to adequately provide the proper load bearing capacity for the support pier footings.

B. Perimeter pier footings are required to be 8”x16”x4”concrete pads or equivalent. Perimeter piers shall be single tiered and placed parallel to the sidewall under the rim joist.

C. Poured-in-place concrete pads, slabs, or runners used as footings for a Factory-Built home shall be a minimum 6-in thick with a least a 28 day compressive strength of 3,000 pounds per square inch (psi) and shall be required to contain proper reinforcing steel. If an existing concrete slab is to be used as the foundation of the home and the thickness and the existence of reinforcing steel cannot be readily determined, all main frame support piers shall be required to be placed on a solid concrete footing 16 x 16 inches or ABS pads. In addition, the top elevation of the concrete slab shall be a minimum of 4 inches higher than the existing grade of the soil around the slab.

Source: *Miss. Code Ann.* §§ 75-49-1, et seq.; 75-49-11 (Supp. 2013).

Rule 5.06.7-10: Marriage Wall Piers

Marriage wall piers shall be constructed to the same requirements as all other main frame support pier requirements. Marriage line piers, less than 36 inches in height, shall be single tiered, on footings and placed perpendicular to the line of the mated sections of the home. All marriage wall openings are required to have support piers at each side of the opening. Typical marriage wall openings are cathedral openings and passageway openings which are 48 inches and larger. Marriage walls shall also have support piers at each ridge beam column and within 2 ft. of each end of the home.

Source: *Miss. Code Ann.* §§ 75-49-1, et seq.; 75-49-11 (Supp. 2013).

Rule 5.06.8: Pier Spacing and Placement[1]

A. To assure proper pier spacing and placement for all Factory-Built homes, the piers shall be located in accordance with the Factory-Built home installation instructions. If the Factory-Built home installation instructions are not available for a used home, piers for single section homes are to be placed under each longitudinal main frame member not to exceed 8 ft. on center spacing for homes that are 14 ft. wide or less and 6 ft. on center for homes that are over 14 ft. wide. End piers shall be no more than two (2) feet and no less than one (1) foot from the end of the frame.

B. The pier spacing under each longitudinal main frame member for all used Factory-Built homes (single wide or multi-section) having a Wind Zone II classifications shall be no greater than 6 ft. on center.

C. Piers for used multi-section homes are to be placed under each longitudinal main frame members not to exceed 6 ft. on center spacing. For used multi-section homes, piers are to be placed under the center marriage line no less than one (1) foot from each end, under ridge beam support columns, and under both sides of openings at the marriage line greater than 12 ft. All marriage wall support piers shall be placed perpendicular to the mate line of the two sections of the home.

Source: *Miss. Code Ann.* §§ 75-49-1, et seq.; 75-49-11 (Supp. 2013).

Rule 5.06.8-1: Placement of Door and Window Support Piers[1]

For all homes, **all** exterior entry doors shall have piers or a manufacturer's approved support device on each side of the opening. All windows over 48 inches wide shall be properly blocked under each side of the opening (footings for these support piers may be 8"x 16" x 4" concrete pads or equivalent). In the event that an outrigger support, electrical, mechanical equipment or other devices is directly under one side of the opening, the blocks on that side may be offset up to maximum of 6 inches in either direction of the supported member. If the placement of the piers

cannot be achieved according to this regulation, the installer/transporter must document on the Property Locator Form Checklist the reasons for the deviation from the regulation.

Source: *Miss. Code Ann.* §§ 75-49-1, et seq.; 75-49-11 (Supp. 2013).

Rule 5.06.8-2: Placement of End Support Piers[1]

Where practical for all homes, the end support piers (including the end marriage wall piers) should be placed within 1 ft. of the ends of the main frame but shall not be more than 2 ft. from the end of the frame. When the location and spacing of wheels and axles, or other structural members of home frames, or undercarriages prevent spacing of piers on 8 or 6 ft. centers, the spacing shall be as near 8 or 6 ft. maximum spacing as practicable in the area of the obstruction.

Source: *Miss. Code Ann.* §§ 75-49-1, et seq.; 75-49-11 (Supp. 2013).

Rule 5.06.8-3: Placement of Piers Under Concentrated Loads[1]

Piers shall be placed under other concentrated loads such as porch posts, bay window overhangs, and masonry faced fireplaces or floor overhangs. Factory-Built Homes that exceed 16 ft. per floor in width shall have perimeter piers under the sidewalls every 6 ft. and at each corner.

Source: *Miss. Code Ann.* §§ 75-49-1, et seq.; 75-49-11 (Supp. 2013).

Rule 5.06.8-4: Placement of Perimeter Support Piers

Perimeter piers shall be placed under the intersection of a perimeter joist and a transverse joist or shall be under a 4x4 inch brace that supports at least two floor joists.

Source: *Miss. Code Ann.* §§ 75-49-1, et seq.; 75-49-11 (Supp. 2013).

Rule 5.06.8-5: Piers for Homes Installed In Designated Flood Area

All piers and foundation supports for homes that are installed in a designated flood prone area shall be designed by a licensed engineer and shall have drawings of the as-built design with the engineer's registered stamp. The engineer designed foundation shall comply with the requirements set forth in the manual, Factory-Built Home Installation In Flood Hazard Areas, published by the Federal Emergency Management Agency (FEMA 85; September 1985).

Source: *Miss. Code Ann.* §§ 75-49-1, et seq.; 75-49-11 (Supp. 2013).

Rule 5.06.9: Installation Instructions for ABS Pads[1]

A. The purpose of this section is to emphasize that **the ground under the ABS pads must be leveled, evenly compacted, and cleared of all vegetation and debris before the placement of the pads.**

B. Note that if the pad deflects more than 5/8 of an inch when installed, pier spacing is incorrect for the existing soil conditions. The maximum deflection in a single pad is 5/8 of an inch measured from the highest point to the lowest point of the top.

C. Installation Instructions for ABS Pads B 26X 26 Inch Pad Configuration.

1. All pads are to be installed flat side down, ribbed side up.

2. The ground under the pads should be leveled as smooth as possible with all vegetation removed. Pads are not to be placed on natural grade unless otherwise permitted by the local building authority.

3. Pier and pad spacing will be determined by the Factory-Built home manufacturer's written set up instructions. In the absences of home manufacturer's written set up instructions and written set up instructions from the pad manufacturer, the pier and pad spacings shall be no greater than 6 ft. apart for Wind Zone I areas and no greater than 4 ft. for Wind Zone II areas.

4. The open cells between the ribbings on the upper side of the pads may be filled with soil or sand after installation to prevent any accumulation of stagnant water in the pads.

5. A pocket penetrometer may be used to determine the actual soil bearing value. If soil testing equipment is not available, an assumed soil bearing capacity value of 1000 lbs./square foot (psf) may be used.

6. All pad sizes shown are nominal dimensions and may vary to 1/8 of an inch.

7. The maximum deflection in a single pad is 5/8 of an inch measured from the highest point to the lowest point of the top face. (Please review Table V and Figures 6 and 7).

TABLE V – SIZE AND LOAD

PAD SIZE	PAD AREA	1000 LB.SOIL	2000 LB.SOIL	3000 LB.SOIL
16” X 16”	256 sq. in.	1,780 lbs.	3,560 lbs.	5,333 lbs.
18.5” X 18.5”	342 sq. in.	2,375 lbs.	4,750 lbs.	7,125 lbs.
20” X 20”	400 sq. in.	2,750 lbs.	5,500 lbs.	8,250 lbs.

a. Any configuration above may be used to replace a home manufacturer's recommended concrete or wood base pad.

b. The maximum load at any intermediate solid value may be determined as the average of the next lower and next higher soil values given in the above table.

c. Pad sizes shown are nominal dimensions and may vary up to 1/8 inch.

d. Pad loads are the same when using single stack or double stack blocks.

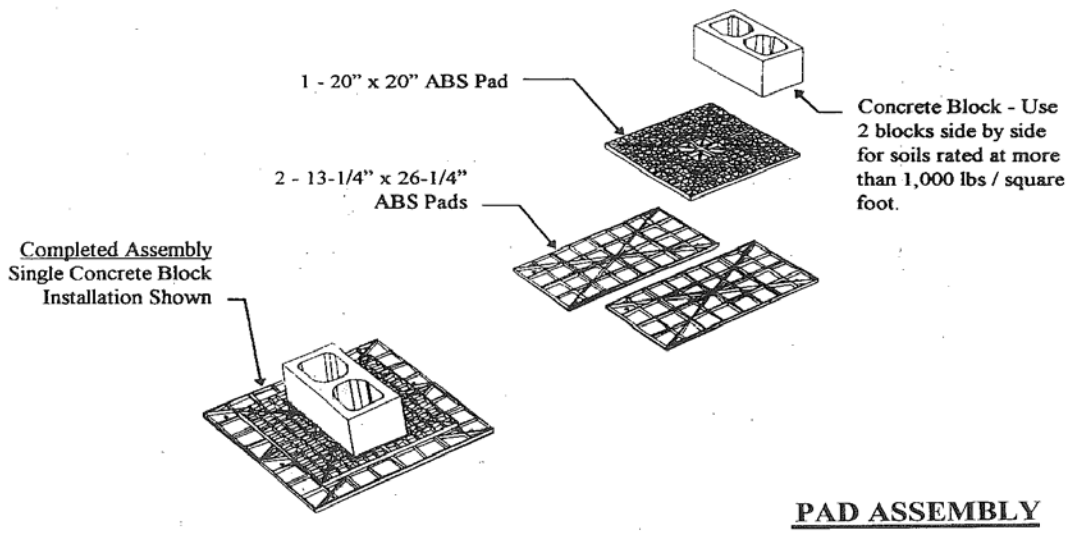

Figure 6. ABS pad assembly installation instructions for a 26"x 26" configuration

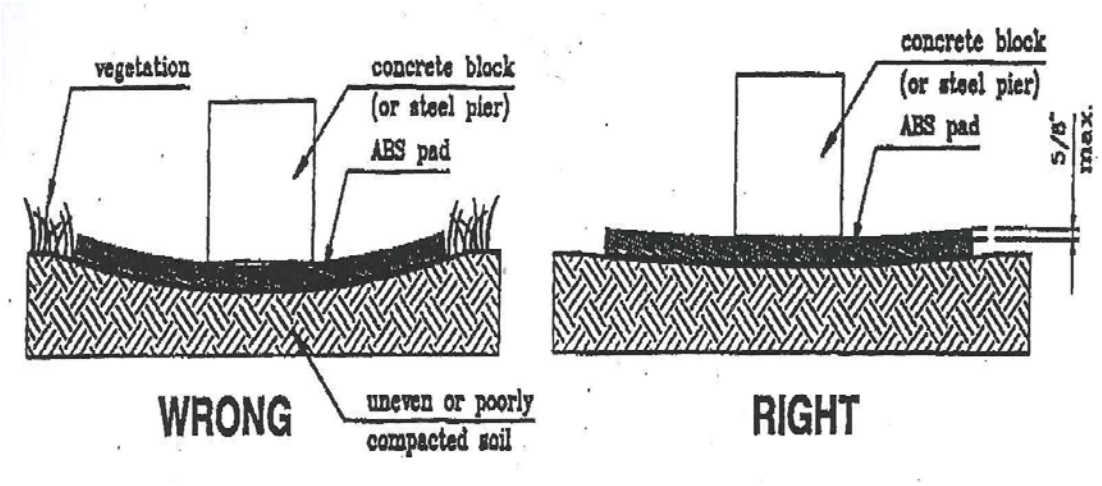

Figure 7. Maximum allowable deflection in a single ABS pad

Source: *Miss. Code Ann.* §§ 75-49-1, et seq.; 75-49-11 (Supp. 2013).

Rule 5.06.10: Tie-downs

Factory-Built homes with provisions for installation of anchor systems, including instructions, in accordance with Federal Manufactured Home Construction & Safety Standards, Section 24 CFR 3280.306 shall be installed in accordance with the manufacturer's instructions. Factory-Built homes not provided with such installation instructions, or Factory-Built homes not provided with instructions for the zone (wind or non- wind) in which they are being installed shall comply with the following:

Source: *Miss. Code Ann.* §§ 75-49-1, et seq.; 75-49-11 (Supp. 2013).

Rule 5.06.10-1: Single-wide Factory-Built Homes

A. The number of tie-downs for single wide (10 ft., 12 ft., 14 ft., or 16 ft.) Factory-Built homes shall comply with Tables VI and Table VII.

B. All used Factory-Built homes shall be tied down in accordance with Table VI and Table VII unless the anchoring system is designed and approved by a registered professional engineer (as per manufacturer's installation instructions).

C. Single section Factory-Built homes shall have diagonal and vertical ties and anchors in accordance with Table VI and Table VII unless the manufacturer's installation instructions are utilized.

TABLE VI - MINIMUM NUMBER OF TIEDOWNS FOR WIND ZONE II*

Length of Factory-Built home, excluding draw bar (ft.)	Number of vertical ties**	Number of diagonal ties, each side	Total required anchors per home
0-40	5	5	10
41-60	7	7	14
61-84	9	9	18
**** 85 +			

TABLE VII - MINIMUM NUMBER OF TIEDOWNS FOR WIND ZONE I*

Length of Factory-Built home, excluding draw bar (ft.)	Number of vertical ties ***	Number of diagonal ties, each side	Total required anchors per home
0-40	0	4	8
41-60	0	6	12
61-84	0	8	16

* These tables are based on a minimum working load per tie of 3,150 lbs. with a 50 % overload (4,725 lbs. total).

** The Federal Manufactured home construction and safety standards require all Factory-Built homes designed to be located in wind Zone II and III to have a diagonal tie installed at each vertical tie location.

*** If existing vertical tie down straps or brackets are present on the home, vertical straps and anchors must be installed at these locations.

**** If the support pier height is over 24 inches, an additional diagonal tie must be added, per side, for every additional 12 inches of pier height or a portion thereof.

Source: *Miss. Code Ann.* §§ 75-49-1, et seq.; 75-49-11 (Supp. 2013).

Rule 5.06.10-2: Multi-Sectional Factory-Built Homes

A. All used multi-sectional Factory-Built homes shall have diagonal ties and anchors as required above for single-wide Factory-Built homes as listed in Tables VI and VII above. The number of anchors and straps along the mate line of the multi-sectional Factory-Built home shall be one/half of the required number for one side of a single wide unit having the same length. A minimum of two of the anchor and straps are to be placed within 2 ft. of the end of each section of the home.

B. The installation of anchors and diagonal ties will be required along the mate line on all used multiple section Factory-Built homes unless the manufacturers installation manual for the home is available and specifies that these stabilizing devices are optional.

C. All new multi- sectional Factory-Built homes are to be secured at the centerline with straps and anchors to the specifications in the manufacturer's installation manual or at the locations designated on the home. In addition to centerline ties specified by the manufacturer, a centerline tie must be attached within two (2) feet of each end of each section of the Factory-Built home. Where necessary, an approved bracket shall be installed by the installer/transporter.

D. All multi-sectional homes shall be lagged and sealed together in accordance with the manufacturer's installation instructions. If no manufacturer's installation instructions are available, the instructions provided in this regulation shall be followed.

Source: *Miss. Code Ann.* §§ 75-49-1, et seq.; 75-49-11 (Supp. 2013).

Rule 5.06.10-3: Pan-Type Foundation Stabilizing Systems

1. Proprietary pan-type foundation stabilizing systems shall be installed in accordance with the pan system manufacturer's installation instructions provided with the product as it relates to the length of the home, single-wide or multi-sectional home, the maximum pier height and the pitch of the roof. The manufacturer name and model number of the pan- type foundation stabilizing system shall be included in the comments section of the Property Locator/ Inspection Report form provided to the State Fire Marshal's office.

2. Prior to the selection and use of the pan-type foundation stabilizing system, it is the responsibility of the installer/transporter to check with the LAHJ to determine if any restrictions have been placed on the use of these types of stabilizing systems.

Source: *Miss. Code Ann.* §§ 75-49-1, et seq.; 75-49-11 (Supp. 2013).

Rule 5.06.10-4: **Alternate Systems[1]**

The specifications listed above for the tie-downs are minimum standards. Other anchor systems may be approved by the Division or LAHJ provided that such designs are prepared by a registered professional Mississippi engineer or architect based on the criteria set forth in Federal Manufactured Home Construction & Safety Standards, Section 3280.306.

Source: *Miss. Code Ann.* §§ 75-49-1, et seq.; 75-49-11 (Supp. 2013).

Rule 5.06.10-5: Tie-Down Spacing and Sizes[1]

The following specifications are the minimum standards for all tie-down spacing and sizes.

A. Over the top tie-downs shall be positioned at stud and rafter locations near each end of the Factory-Built home. Others, if needed, may be positioned between them.

B. A metal roof protector must be used with over-the-roof tie down straps.

C. Wherever feasible, over the top tie-downs and frame ties directly beneath them may use the same anchors.

D. All vertical side wall and shear wall tie down buckles existing on the home must be properly strapped and anchored.

E. All tie-down straps, cables and devices must be tested and approved. All ties shall be fastened to ground anchors and drawn tight with turnbuckles, yoke type fasteners or other such tensioning devices listed with the ground anchor.

F. All tie-down straps and devices must be attached to the Factory-Built home in accordance with the manufacturer's instructions for the specific types of straps and devices. All tie- down straps and devices must be tested and approved. Straps must be type I, finished B, grade 1 steel strapping, 1 ¼" wide and 0.035" thick conforming with Federal Specifications strapping steel and seals FS QQ-S-781H-1974.

G. Tie down straps shall not be kinked or bent or otherwise abnormally stressed when installed. Straps must not be in contact with the support piers.

H. The angle of the diagonal tie down strap shall not exceed 45 degrees between the strap and the ground. If the angle exceeds 45 degrees an additional strap must be installed and attached to the opposite support frame.

I. All straps must be properly attached to the anchor head according to the manufacturer's installation instruction and properly tensioned. According to manufacturer specifications, the winding of the strap on the anchor head bolt must contain a minimum of four to five complete turns.

J. Splices in the anchor straps must be installed in accordance with the manufacturer's instructions for straps and devices. If manufacturer instructions for splicing anchor straps are not available, the following instructions will apply. The ends of the straps must overlap a minimum of 6 inches and a maximum of 12 inches. Two (2) crimp seals must be installed in the overlap of the strap ends and each crimp seal must be double crimped.

K. Cables shall be either 7/32 inch diameter or greater (7x7) steel cable or 1/4 inch diameter or greater (7x19) aircraft cable. All cable ends shall be secured with at least two U bolt type cable clamps or other fastening device as approved by the building official.

L. Tie materials shall be capable of resisting an allowable working load of 3,150 lbs. with no more than 2% elongation and shall withstand a 50% overload [4,725 lbs. total]. Tie- downs exposed to weathering shall be resistant to weathering deterioration at least equivalent to that provided by a coating of zinc on steel of not less than 0.30 oz. per square foot of surface coated. Type I, Class B, Grade I, steel strapping 1 1/4 inches wide and 0.035 inch thick, conforming to Federal Specifications QQ S 781 F, is judged to conform to this section.

M. Materials used for ties must terminate with D-rings bolts, or other fastening devices, which will not cause distortion of the band or reduce its breaking strength of 4,725 lb. Please note that ties should be double wrapped (double looped) at top of beam, not at the bottom.

N. Connection of the cable frame tie to the I-beam (or other shape) main structural frame member should be by a 5/8 inch drop forged closed eye bolted through a hole drilled in the center of the I-beam web. A washer, or equivalent, shall be used so that the beam is sufficiently reinforced around the hole. If steel strap ties are used, care should be exercised to insure that minimum bending radius is adhered to so that the breaking strength of the strap is not reduced.

O. Frame ties shall connect the anchor and the steel I-beam (or other shape) main structural frame member which runs lengthwise under the Factory-Built home. Frame ties shall never be connected to any of the steel outrigger beams which fasten to and intersect the main I beam at right angles.

P. Ground anchors should be aligned with center of piers. Also, they should be situated immediately below the outer wall to accommodate over the top ties as well as frame ties.

Source: *Miss. Code Ann.* §§ 75-49-1, et seq.; 75-49-11 (Supp. 2013).

Rule 5.06.11: Anchors

Devices used to anchor Factory-Built homes shall meet the requirements listed in the following paragraphs.

Source: *Miss. Code Ann.* §§ 75-49-1, et seq.; 75-49-11 (Supp. 2013).

Rule 5.06.11-1: Soil Classification of Anchors

All ground anchors must be installed in the soil types for which they are tested and approved. It should be noted that soil types may vary across a home installation site. Prior to installing any ground anchor, it is the responsibility of the installer/transporter to determine the soil class at the installation site and to ensure that the proper class of anchor is installed for the existing type of soil. The acceptable method for the determination of the soil classification is by a soil test probe. The soil classifications shown in Table I are the accepted standards of this Regulation and are to be used for the purpose of determining the design loads, specifications and holding power of anchors and tie down devices for installation of Factory-Built homes in the State of Mississippi.

Source: *Miss. Code Ann.* §§ 75-49-1, et seq.; 75-49-11 (Supp. 2013).

Rule 5.06.11-2: Determining the Soil Class of Anchors

The use of a soil test probe shall be required in the determination of the soil classification at the installation site for the proper soil class anchor that can be used. A minimum of 6 readings (one at each of the four corners of the home, within two feet of the corners, one at the front center of the home and one at the rear center of the home) shall be required in order to properly choose the anchoring device required for the home. Results of the soil test probe may be averaged and used to determine anchor types based on the anchor manufacturer's installation and/or user manual requirements. However, **all** of the soil test probe torque values and the depth readings obtained at the installation site, including the computed average reading, shall be recorded on the Property Locator/ Inspection Report form to confirm the determined soil class for anchor selection.

Source: *Miss. Code Ann.* §§ 75-49-1, et seq.; 75-49-11 (Supp. 2013).

Rule 5.06.11-3: Preferred Soil Class Anchor[1]

If no soil test probe measurements have been obtained for the determination of the soil classification at the installation site, it is preferred that a soil class type C-4 rated anchor shall be used. C-4 rated anchors shall have a minimum auger diameter of 6 inches and shall be installed to their full depth. When the condition of the soil (including ground density, composition, moisture content and compaction) will not allow the C-4 rated anchors to be installed to their full depth,

the C-4 rated anchor that could not be installed shall be left in place, soil test probe readings obtained and the appropriate soil class anchor installed adjacent to the failed C-4 anchor. All ground anchors used shall be capable of withstanding 4,750 lbs. of pull (in a vertical or diagonal direction) without failure.

Source: *Miss. Code Ann.* §§ 75-49-1, et seq.; 75-49-11 (Supp. 2013).

Rule 5.06.11-4: Proper Installation of Ground Anchors

A. Ground anchors shall be aligned close to the end of the piers, but not in exact center that will interfere with frame ties.

B. All anchors shall be installed in a vertical position or with the anchor rod in direct alignment with the force of the loading.

C. Anchors to reinforced concrete slabs must be strength comparable to that presented above. If a Factory-Built home is to be placed on a monolithic concrete slab, the ground anchors may be replaced with anchor bolts imbedded in the concrete slab. The location of the anchor bolt in relation to the longitudinal support I-beam will be the same as the ground anchors.

D. Other anchors which are capable of withstanding 4,750 lbs. of pull without failure may be approved by the Factory-Built Home Division of the State Fire Marshal's Office as equivalent to above specifications.

E. All ground anchors installed in a vertical position having frame tie connections shall have approved stabilizer plates, stabilizer caps, concrete collar, or other approved stabilizer devices installed to resist horizontal movement. The stabilizer device must be installed according to the manufacturer’s instructions and the top of the device must be flush with the surface of the soil. If a concrete cap is used it must be a minimum of 10” in diameter and 18” deep. Exception: Stabilizer plates are not required with coral anchors or at centerline or marriage wall locations.

F. Anchors must be installed to full depth with the bottom of the anchor head within one (1) inch of the soil’s surface.

G. The "Standard Method of Test for Manufactured Home Anchors, Parts A and B" is described in the Federal Manufactured Home Construction and Safety Standards, 24 CFR Section 3280.401.

H. The use of any alternate systems of anchoring not approved by HUD may be used if proof that the manufacturer of the home has approved the use of such systems is provided with the submittal of the Property Locator/Inspection Report Form.

I. All ground anchors, tie down devices, and ground foundation systems must be installed according to the manufacturer's installation instructions for their respective ground anchors, tie down devices and ground stabilization devices.

J. Rock anchors can only be used in solid rock.

Source: *Miss. Code Ann.* §§ 75-49-1, et seq.; 75-49-11 (Supp. 2013).

Rule 5.07: Official Notices and Bulletins

All manufacturers, retailers, developers and installer/transporters shall maintain any and all official notes and/or bulletins issued by the Factory-Built Home Division for three (3) years from the date of issuance. If so required by this Factory-Built Home Division, all manufacturers, retailers, developers and installer/transporters shall display official notices and bulletins in plain view for the public. Exception: Any official notices and bulletins marked as permanent records or **DO NOT DESTROY**.

Source: *Miss. Code Ann.* §§ 75-49-1, et seq.; 75-49-11 (Supp. 2013).

Rule 5.08: Severability

If any section or portion of a section of this Regulation or the application thereof is held by a court to be invalid, such invalidity shall not affect any other provision of that section or application of the Regulation which can be given effect without the invalid provision of application, and to this end the provisions of the Regulation are declared to be severable.

Source: *Miss. Code Ann.* §§ 75-49-1, et seq.; 75-49-11 (Supp. 2013).

Rule 5.09: Repeal of Emergency Regulations[1]

Regulations MH-2009-1 and MH 2010-3 are repealed.

Source: *Miss. Code Ann.* §§ 75-49-1, et seq.; 75-49-11 (Supp. 2013).

Rule 5.10: Effective Date

This Regulation shall become effective on January 1, 2015.

Source: *Miss. Code Ann.* §§ 75-49-1, et seq.; 75-49-11 (Supp. 2013).